HONDA

SCOOPY eSP
(ACF110CBT)

TIPE CBS ISS 2017 (ACF110CBTH)
TIPE CBS ISS 2018 (ACF110CBTJ)

PARTS CATALOG
2

18K93HI2

© Honda Motor Co., Ltd. 2018

DAFTAR ISI

PETUNJUK PEMAKAIAN 1

KELOMPOK MESIN 2

KELOMPOK RANGKA 3

INDEKS NOMOR PART 4

INDEKS NAMA PART 5

Instruksi penggunaan parts catalog

- **Parts catalog ini telah dibuat pertanggal 10 Januari 2018.**
  - Setelah tanggal ini, mungkin terjadi perubahan pada parts di dalam catalog ini, dan parts tertentu diganti dengan parts lain atau dihapus (tidak dijual lagi).
  - Bacalah parts catalog news untuk revisi yang dilakukan setelah 10 Januari 2018.
- **Selalu beritahu nomor part sewaktu memesan part.**
  - Periksa model, tipe, nomor seri, warna, pabrik pembuat, dan ukuran seperlunya sebelum memesan part.
  - Perhatikan bahwa ilustrasi (gambar part) dapat berbeda dalam bentuknya dari part sebenarnya. Ilustrasi hanya diberikan untuk membantu anda mencari parts tersebut.
- **Sewaktu terjadi modifikasi atau penambahan pada parts catalog ini, maka akan diterbitkan edisi yang direvisi pada waktu yang sesuai, yang memuat nomor revisi yang berurutan pada sampulnya. Kami menganjurkan agar anda mendapatkan revisi-revisi tersebut supaya parts catalog anda tetap mengikuti perkembangan mutakhir setiap waktu. Untuk mengetahui apakah revisi parts catalog telah diterbitkan, hubungi distributor Honda anda.**

Versi penerbitan pertama
tanggal 1 Maret 2017
Honda Motor Co., Ltd.

DAFTAR ISI

	Halaman	
• Instruksi penggunaan parts catalog	1	1
• Cara mencari informasi part	2	
• Struktur parts catalog	3	
• Jika parts telah direvisi	5	
• Singkatan-singkatan yang dipakai di dalam parts catalog	5	
• Blok part dan pengecekan nomor seri	6	
• Model, kode parts catalog dan nomor seri yang berlaku	7	
• Tabel warna	8	
• Selang bahan bakar, selang untuk keperluan umum dan selang vinyl	18	
• FLAT RATE SERVICE TIME	22	
• Indeks gambar	27	
• KELOMPOK MESIN	33	2
• KELOMPOK RANGKA	51	3
• INDEKS NOMOR PART	95	4
• INDEKS NAMA PART	100	5

Cara mencari informasi part

Ⓐ Mencari parts dengan "Indeks gambar"

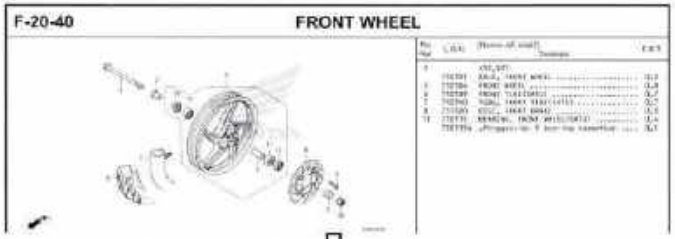

Ⓑ Mencari parts dengan "Indeks nomor part"

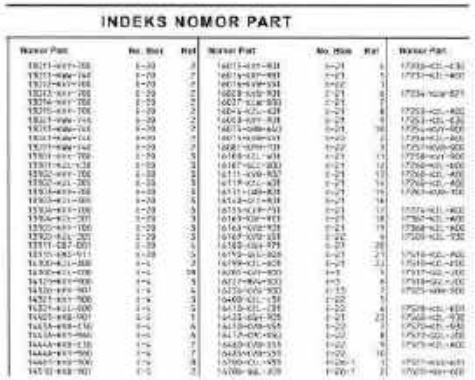

Ⓒ Mencari parts dengan "Indeks nama part".

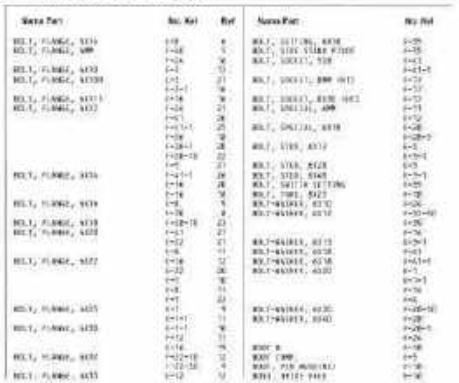

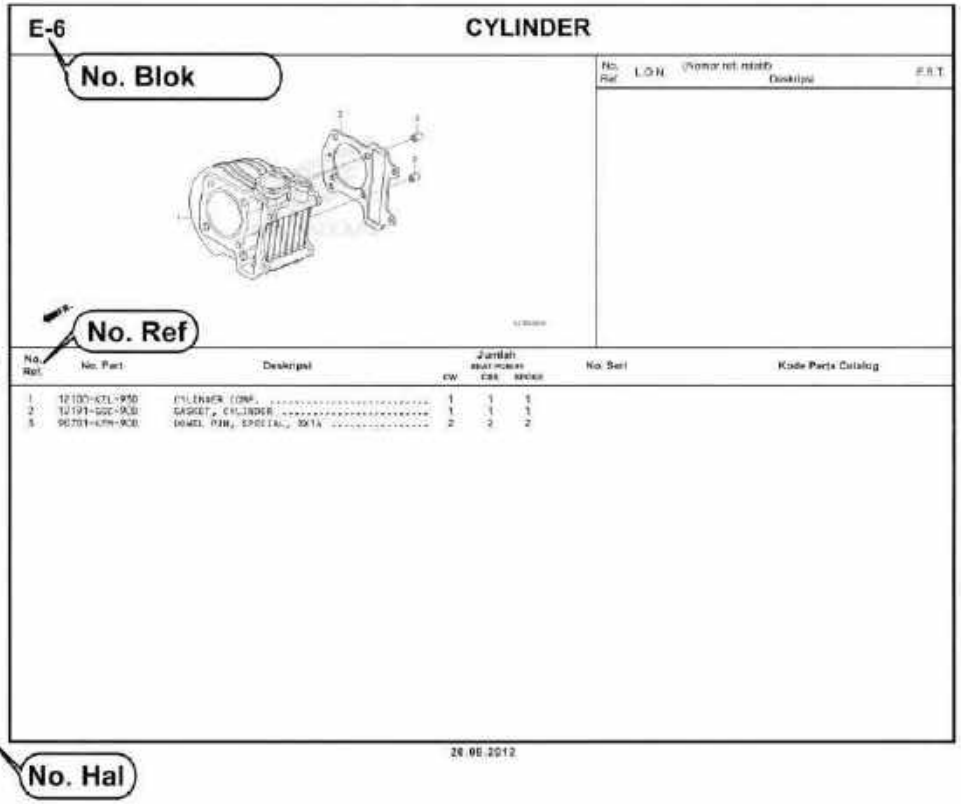

Struktur Parts Catalog

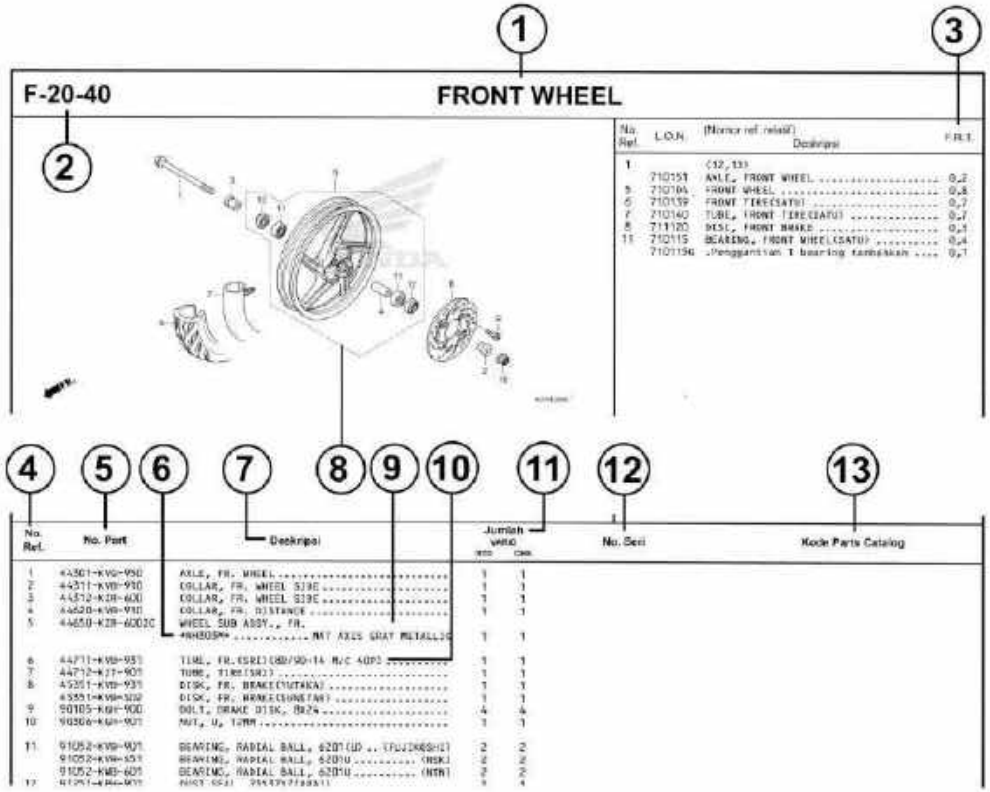

1. **Nama Blok** 2. **Nomor Blok**
3. **Bagian yang diservis/Flat Rate Time (F.R.T.)**
4. **Nomor referensi**
   - Nomor referensi yang diberikan tanda kurung menunjukkan bahwa ia dilanjutkan dari halaman sebelumnya.
5. **Nomor part** 6. **Kode warna Honda**
7. **Deskripsi**
8. **Assembly (Susunan/rakitan)**
   - Bagian-bagian yang diberikan bingkai dengan garis-garis patah pada gambar terurai tersedia dalam rakitan lengkap. (tersedia pula dalam satuan terpisah).
9. **Deskripsi warna**
10. **Catatan**
    - Catatan ditulis dalam tanda kurung di kolom nama part.
11. **Jumlah**
    - Jumlah yang ditulis dalam tanda kurung menunjukkan part pilihan (optional part).
    - Jumlah yang ditandai dengan "N" menunjukkan part pilihan yang harus dipilih sebanyak yang diperlukan.
    - Jumlah yang diperlukan menunjukkan jumlah part yang dipakai di blok ini.
12. **Nomor seri**
13. **Kode parts catalog**
    - Jika kolom kode parts catalog kosong, berarti bahwa part berlaku untuk semua kode.

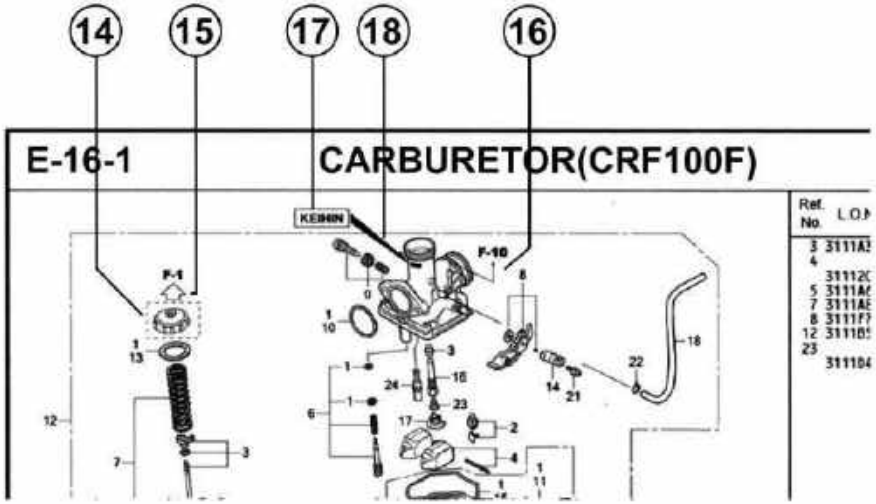

(14) ⬚

- Part yang dikelilingi dengan garis titik-titik ⬚ dijelaskan pada blok lain.

(15) ⇦

- Panah yang kosong di dalamnya ⇦ menunjuk ke No. blok untuk part yang dikelilingi dengan garis titik-titik ⬚.

(16) ←

- Panah yang padat ← menunjuk ke No. blok dimana part yang bersangkutan terhubung.

(17) Informasi Identifikasi Penggantian Untuk No. Part Yang Ditunjuk

(18) Lokasi Informasi Identifikasi Penggantian Untuk No. Part Yang Ditunjuk

- Jika tanda panah menunjuk ke 18, part ini tidak sesuai dengan No. Part yang berbeda.
- Pastikan untuk memesan part dari pabrikan yang sama, termasuk komponen part.
- Untuk pemesanan, indikasi No. Part termasuk simbol yang ditampilkan pada bagian yang berlaku pada part yang akan diganti.

Jika parts telah direvisi

No. Ref.	No. Part	Deskripsi	Jumlah CBR250R STD B	Jumlah CBR250R ABS B	No. Seri
1	45156-MCE-000	CLAMPER, R. FR. BRAKE HOSE --	1	1	
2	45157-MCE-000	CLAMPER, L. FR. BRAKE HOSE --	1	1	
3	61100-MCE-000ZA	FENDER COMP., FR. *NH411M*FORCE SILVER METALLIC	1	-	3J,4J
			-	1	
	61100-MCE-000ZB	*PB284C*...CANDY PHOENIX BLUE	1	-	J,2J
4	61101-MCE-000	PLATE, FR. FENDER (###)-----	2	2	1008000
	61101-MCE-010	----------	2	2	1008001
5	61102-MCE-300	CUSHION, FR. FENDER --------- (BLACK)	2	2	
6	61105-MCE-000	STAY, FR. FENDER MOUNTING ---	2	2	
7	61107-MR7-000	COLLAR (6.5) ----------	4	4	
8	96001-06020-00	BOLT, FLANGE, 6X20 ----------	4	4	

Nomor telah dipakai sejak dari model pertama tanpa revisi.

Jika diperlihatkan pada sisi kiri, maka berlaku untuk model-model dari No. 1008001 dan nomor- nomor berikutnya.

Jika diperlihatkan pada sisi kanan, maka berlaku untuk model-model sampai No. 1008000.

- Part yang tercantum dengan "###" pada ujung nama part mempunyai jangka waktu pemasokan terbatas (part tidak dijual).

Singkatan-singkatan yang dipakai di dalam parts catalog

- "L." atau "R." pada uraian dari sebuah part merupakan singkatan dari sisi kiri (LEFT) atau sisi kanan (RIGHT). Kiri atau kanan ditentukan seakan-akan anda sedang duduk di tempat duduk sepeda motor/skuter.

Singkatan-singkatan sebagai berikut dipakai di dalam parts catalog ini.

A	Ampere	L.	Left
ABS	Anti-lock brake system	L (100L)	Link (100 Links)
A.C	Alternating current	L.E.D	Light emitted diode
A.M	Attaching mark	MM	Millimeter
ASSY	Assembly	MPH	Miles per hour
C.D.I.	Capacitive discharge	R.	Right
COMP.	Complete	RR.	Rear
D.C.	Direct current	STD.	Standard
EX.	Exhaust	T (22T)	Tooth (22 Teeth)
FR.	Front	TCS	Traction control system
G	Gram	T.M.	Transcript mark
HEX.	Hexagonal	V	Volt
IN.	Inlet	W	Watt
KPH	Kilometers per hour	WL	With labelling
		WOL	Without labelling

Blok part dan pengecekan nomor seri

Blok part	Parts mesin E-1~	Parts throttle body E-22	Parts rangka F-1~
No seri yang diperlukan	Nomor seri mesin	Nomor seri Throttle body	Nomor seri rangka
Titik pemeriksaan	1	2	3

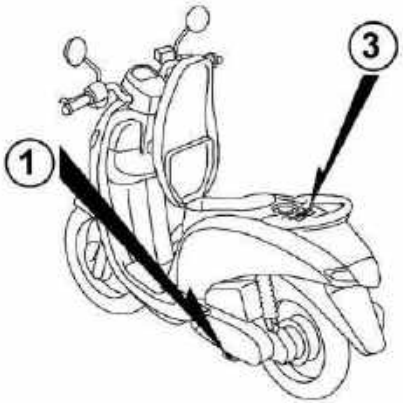

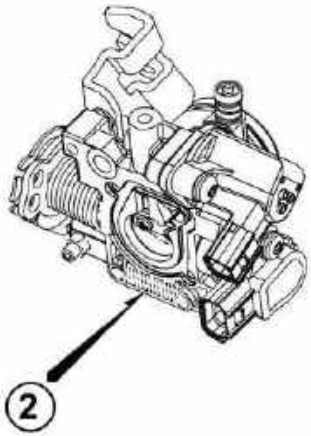

Model, kode parts catalog dan nomor seri yang berlaku

Model, kode parts catalog dan No. seri yang berlaku yang diberikan di dalam parts catalog ini dapat diidentifikasi sebagai berikut.

Model	Kode area	Tipe	Tahun	No. Seri Mesin yang berlaku	No. Seri Rangka yang berlaku	No. identifikasi throttle body yang berlaku
SCOOPY eSP (ACF110CBTH)	2IN	SPORTY	2017	JM31E0000001~	MH1JM31**GK000001~ GK099999	GQRGB A
	3IN	PLAYFULL		JM31E0000001~	MH1JM31**GK000001~	
	IN	STYLISH		JM31E0000001~	MH1JM31**GK000001~ GK099999	
SCOOPY eSP (ACF110CBTJ)	2IN	SPORTY	2018	JM31E0000001~	MH1JM31**HK000001~	
	IN	STYLISH		JM31E0000001~	MH1JM31**HK000001~	

* Dari nomor identifikasi karburator/throttle body, hanya bagian yang digaris bawahi di bawah ini yang dipakai untuk registrasi.

GQRGB [A] KC ア

Tabel warna

- Ketika memesan part berwarna, bacalah tabel di bawah ini dan gunakan nomor part yang terdiri dari nomor part dasar yang bersangkutan yang telah ditambahkan kode warna part.

SCOOPY eSP TIPE SPORTY (ACF110CBTH).....2IN

No.	MODEL		ACF110CBTH (TIPE SPORTY)						
	WARNA		Black	Ross white	Winning red	Model yang berlaku		No. blok yang berlaku	No. Ref.
	KODE		NH-1	NH-196	R-258	Model pertama yang berlaku	Model akhir yang berlaku		
	Nama parts berwarna	No. dasar part	NH1	NH196	R258				
1	COVER B, SPEEDOMETER	53206-K93-N00	ZL	ZJ	ZH			F-2	5
2	COVER, SPEEDOMETER RING	53207-K93-N00	RSW	FMB	FMB			F-2	7
3	COVER A, SPEEDOMETER	53205-K93-N00	ZJ	ZL	ZL			F-2	6
4	COVER, CENTER	80151-K93-N00	ZK	ZM	ZM			F-15	1
5	COVER, FR. TOP	64301-K93-N00	ZP	ZN	ZM			F-12	8
6	COVER, INNER	81141-K93-N00	ZK	ZJ	ZJ			F-12	16
7	COVER, L. BODY	83600-K93-N00	ZN	ZM	ZL			F-15	5
8	COVER, L. FR.	64202-K93-N00	ZK	ZH	ZG			F-12	7
9	COVER, L. UNDER SIDE	64431-K93-N00	ZK	ZH	ZG			F-14	7
10	COVER, R. BODY	83500-K93-N00	ZN	ZM	ZL			F-15	3
11	COVER, R. FR.	64201-K93-N00	ZK	ZH	ZG			F-12	4
12	COVER, R. UNDER SIDE	64421-K93-N00	ZK	ZH	ZG			F-14	5
13	COVER, RR. CENTER	83750-K93-N00	ZK	ZH	ZG			F-15	4
14	COVER, INNER UPPER	81134-K93-N00	ZJ	ZL	ZL			F-12	15
15	COVER, MUFFLER	18318-K93-N00	ZK	ZK	ZK			F-30	4
16	COVER, RR. CENTER LOWER	83650-K93-N00	ZN	ZL	ZK			F-15	6
17	COVER, UNDER	64340-K93-N00	ZB	ZB	ZB			F-14	4
18	FENDER, FR.	61100-K93-N00	ZN	ZM	ZL			F-11	1
19	HOOK, LUGGAGE	81132-GAH-000	YV	YV	YV			F-12	13
20	HOUSING COMP, STARTER SWITCH	35165-K93-N01	ZA	ZA	ZA			F-4-10	6

SCOOPY eSP TIPE SPORTY (ACF110CBTH).....2IN

No.	MODEL		ACF110CBTH (TIPE SPORTY)						
	WARNA		Black	Ross white	Winning red	Model yang berlaku		No. blok yang berlaku	No. Ref.
	KODE		NH-1	NH-196	R-258	Model pertama yang berlaku	Model akhir yang berlaku		
	Nama parts berwarna	No. dasar part	NH1	NH196	R258				
21	HOUSING COMP, WINKER SWITCH	35205-K93-N01	ZA	ZA	ZA			F-4-10	12
22	HOUSING, RR. STARTER SWITCH	35164-K93-N01	ZB	ZB	ZB			F-4-10	5
23	HOUSING, WINKER SWITCH RR.	35202-K16-A41	ZC	ZC	ZC			F-4-10	11
24	KNOB, POCKET LID	81144-K93-N00	ZB	ZB	ZB			F-12	18
25	LID, BATTERY	64460-K93-N00	ZC	ZC	ZC			F-14	9
26	LID, L. POCKET	81142-K93-N00	ZK	ZJ	ZH			F-12	17
27	MIRROR COMP.	88211-K93-N00	ZE	ZD	ZC			F-4-10	28
28	PLUG, HOLE	90656-GCC-000	ZE	ZE	ZE			F-24	16
29	RAIL, RR. GRAB	50410-K93-N00	ZD	ZD	ZD			F-24	1
30	SEAT COMP., DOUBLE	77200-K93-N00	ZB	ZB	ZB			F-24	3
31	STEP, FLOOR	64310-K93-N00	ZC	ZC	ZC			F-14	1
32	STRIPE SET, L.	871X0-K93-N10	ZAL	ZCL	ZBL			F-48-1	1
33	STRIPE SET, R.	871X0-K93-N10	ZAR	ZCR	ZBR			F-48-1	2
34	WHEEL SUB ASSY., FR.	44650-K93-N00	ZA	ZA	ZA			F-20-40	6
35	WHEEL SUB ASSY., RR.	42650-K93-N00	ZA	ZA	ZA			F-22-30	2

SCOOPY eSP TIPE PLAYFULL (ACF110CBTH).....3IN

No.	MODEL		ACF110CBTH (TIPE PLAYFULL)						
	WARNA		Ross white	Ross white	Pearl milky cream	Model yang berlaku		No. blok yang berlaku	No. Ref.
	KODE		NH-196	N-196	Y-214P	Model pertama yang berlaku	Model akhir yang berlaku		
	WARNA COVER DALAM		NH196G	NH196G	Y214				
	Nama parts berwarna	No. dasar part	HIJAU	BIRU	SILVER				
1	COVER B, SPEEDOMETER	53206-K93-N00	ZM	ZN	ZK			F-2	5
2	COVER, SPEEDOMETER RING	53207-K93-N00	BLM	PVB	VSM			F-2	7
3	COVER A, SPEEDOMETER	53205-K93-N00	ZJ	ZJ	ZA			F-2	6
4	COVER, FR. TOP	64301-K93-N00	ZN	ZN	ZK			F-12	8
5	COVER, INNER	81141-K93-N00	ZM	ZM	ZL			F-12	16
6	COVER, L. BODY	83600-K93-N00	ZM	ZM	ZA			F-15	5
7	COVER, R. BODY	83500-K93-N00	ZM	ZM	ZA			F-15	3
8	COVER, RR. CENTER	83750-K93-N00	ZH	ZH	ZA			F-15	4
9	COVER, CENTER	80151-K93-N00	ZN	ZP	ZL			F-15	2
10	COVER, INNER UPPER	81134-K93-N00	ZM	ZN	ZK			F-12	15
11	COVER, L. FR.	64202-K93-N00	ZL	ZM	ZJ			F-12	6
12	COVER, L. UNDER SIDE	64431-K93-N00	ZL	ZM	ZJ			F-14	8
13	COVER, MUFFLER	18318-K93-N00	ZK	ZK	ZK			F-30	4
14	COVER, R. FR.	64201-K93-N00	ZL	ZM	ZJ			F-12	5
15	COVER, R. UNDER SIDE	64421-K93-N00	ZL	ZM	ZJ			F-14	6
16	COVER, RR. CENTER LOWER	83650-K93-N00	ZL	ZL	ZA			F-15	6
17	COVER, UNDER	64340-K93-N00	ZB	ZB	ZB			F-14	4
18	FENDER, FR.	61100-K93-N00	ZM	ZM	ZA			F-11	1
19	HOOK, LUGGAGE	81132-GAH-000	YV	YV	YV			F-12	13
20	HOUSING COMP., STARTER SWITCH	35165-K93-N01	ZA	ZA	ZA			F-4-10	6

SCOOPY eSP TIPE PLAYFULL (ACF110CBTH).....3IN

No.	MODEL		ACF110CBTH (TIPE PLAYFULL)						
	WARNA		Ross white	Ross white	Pearl milky cream	Model yang berlaku		No. blok yang berlaku	No. Ref.
	KODE		NH-196	N-196	Y-214P	Model pertama yang berlaku	Model akhir yang berlaku		
	WARNA COVER DALAM		NH196G	NH196G	Y214				
	Nama parts berwarna	No. dasar part	HIJAU	BIRU	SILVER				
21	HOUSING COMP., WINKER SWITCH	35205-K93-N01	ZA	ZA	ZA			F-4-10	12
22	HOUSING, STARTER SWITCH RR.	35164-K93-N01	ZB	ZB	ZB			F-4-10	5
23	HOUSING, WINKER SWITCH RR.	35202-K16-A41	ZC	ZC	ZC			F-4-10	11
24	KNOB, POCKET LID	81144-K93-N00	ZB	ZB	ZB			F-12	18
25	LID, BATTERY	64460-K93-N00	ZC	ZC	ZC			F-14	9
26	LID, L. POCKET	81142-K93-N00	ZJ	ZJ	ZA			F-12	17
27	MIRROR COMP.	88211-K93-N00	ZD	ZD	ZA			F-4-10	28
28	PLUG, HOLE	90656-GCC-000	ZE	ZE	ZE			F-24	16
29	RAIL, RR. GRAB	50410-K93-N00	ZD	ZD	ZD			F-24	1
30	SEAT COMP., DOUBLE	77200-K93-N00	ZB	ZB	ZB			F-24	3
31	STEP, FLOOR	64310-K93-N00	ZC	ZC	ZC			F-14	1
32	STRIPE SET, L.	871X0-K93-N20	ZCL	ZBL	ZAL			F-48-2	1
33	STRIPE SET, R.	871X0-K93-N20	ZCR	ZBR	ZAR			F-48-2	2
34	WHEEL SUB ASSY., FR.	44650-K93-N00	ZA	ZA	ZA			F-20-40	6
35	WHEEL SUB ASSY., RR.	42650-K93-N00	ZA	ZA	ZA			F-22-30	2

SCOOPY eSP TIPE STYLISH (ACF110CBTH).....IN

No.	MODEL		ACF110CBTH (TIPE STYLISH)					
	WARNA		Black	Mat jasper brown metallic	Model yang berlaku		No. blok yang berlaku	No. Ref.
	KODE		NH-1	YR-342M	Model pertama yang berlaku	Model akhir yang berlaku		
	Nama parts berwarna	No. dasar part	NH1	YR342				
1	COVER B, SPEEDOMETER	53206-K93-N00	ZL	ZG			F-2	5
2	COVER, SPEEDOMETER RING	53207-K93-N00	FMB	MJB			F-2	7
3	COVER A, SPEEDOMETER	53205-K93-N00	ZK	ZL			F-2	6
4	COVER, FR. TOP	64301-K93-N00	ZP	ZL			F-12	8
5	COVER, INNER	81141-K93-N00	ZL	ZJ			F-12	16
6	COVER, L. BODY	83600-K93-N00	ZM	ZK			F-15	5
7	COVER, L. UNDER SIDE	64431-K93-N00	ZJ	ZK			F-14	7
8	COVER, R. BODY	83500-K93-N00	ZM	ZK			F-15	3
9	COVER, R. UNDER SIDE	64421-K93-N00	ZJ	ZK			F-14	5
10	COVER, RR. CENTER	83750-K93-N00	ZJ	ZK			F-15	4
11	COVER, CENTER	80151-K93-N00	ZL	ZM			F-15	2
12	COVER, INNER UPPER	81134-K93-N00	ZK	ZL			F-12	15
13	COVER, L. FR.	64202-K93-N00	ZJ	ZK			F-12	6
14	COVER, MUFFLER	18318-K93-N00	ZK	ZK			F-30	4
15	COVER, R. FR.	64201-K93-N00	ZJ	ZK			F-12	5
16	COVER, RR. CENTER LOWER	83650-K93-N00	ZM	ZN			F-15	6
17	COVER, UNDER	64340-K93-N00	ZB	ZB			F-14	4
18	FENDER, FR.	61100-K93-N00	ZN	ZK			F-11	1
19	HOOK, LUGGAGE	81132-GAH-000	YV	YV			F-12	13
20	HOUSING COMP, STARTER SWITCH	35165-K93-N01	ZA	ZA			F-4-10	6

SCOOPY eSP TIPE STYLISH (ACF110CBTH).....IN

No.	MODEL		ACF110CBTH (TIPE STYLISH)					
	WARNA		Black	Mat jasper brown metallic	Model yang berlaku		No. blok yang berlaku	No. Ref.
	KODE		NH-1	YR-342M	Model pertama yang berlaku	Model akhir yang berlaku		
	Nama parts berwarna	No. dasar part	NH1	YR342				
21	HOUSING COMP., WINKER SWITCH	35205-K93-N01	ZA	ZA			F-4-10	12
22	HOUSING, STARTER SWITCH RR.	35164-K93-N01	ZB	ZB			F-4-10	5
23	HOUSING, WINKER SWITCH RR.	35202-K16-A41	ZC	ZC			F-4-10	11
24	KNOB, POCKET LID	81144-K93-N00	ZB	ZB			F-12	18
25	LID, BATTERY	64460-K93-N00	ZB	ZB			F-14	9
26	LID, L. POCKET	81142-K93-N00	ZK	ZG			F-12	17
27	MIRROR COMP.	88211-K93-N00	ZE	ZB			F-4-10	28
28	PLUG, HOLE	90656-GCC-000	ZE	ZE			F-24	16
29	RAIL, RR. GRAB	50410-K93-N00	ZE	ZE			F-24	1
30	SEAT COMP., DOUBLE	77200-K93-N00	ZA	ZA			F-24	3
31	STEP, FLOOR	64310-K93-N00	ZB	ZB			F-14	1
32	STRIPE SET, L.	871X0-K93-N00	ZAL	ZBL			F-48	1
33	STRIPE SET, R.	871X0-K93-N00	ZAR	ZBR			F-48	2
34	WHEEL SUB ASSY., FR.	44650-K93-N00	ZB	ZB			F-20-40	6
35	WHEEL SUB ASSY., RR.	42650-K93-N00	ZB	ZB			F-22-30	2

SCOOPY eSP TIPE SPORTY (ACF110CBTJ).....2IN

No.	MODEL		ACF110CBTJ (TIPE SPORTY)						
	WARNA		Black	Ross white	Winning red	Model yang berlaku		No. blok yang berlaku	No. Ref.
	KODE		NH-1	NH-196	R-258	Model pertama yang berlaku	Model akhir yang berlaku		
	Nama parts berwarna	No. dasar part	NH1	NH196	R258				
1	COVER B, SPEEDOMETER	53206-K93-N00	ZH	ZJ	ZH			F-2	5
2	COVER, SPEEDOMETER RING	53207-K93-N00	FMB	FMB	FMB			F-2	7
3	COVER A, SPEEDOMETER	53205-K93-N00	ZL	ZL	ZL			F-2	6
4	COVER, FR. TOP	64301-K93-N00	ZP	ZN	ZM			F-12	8
5	COVER, INNER	81141-K93-N00	ZJ	ZJ	ZJ			F-12	16
6	COVER, L. BODY	83600-K93-N00	ZN	ZN	ZN			F-15	5
7	COVER, L. FR.	64202-K93-N00	ZK	ZH	ZG			F-12	7
8	COVER, L. UNDER SIDE	64431-K93-N00	ZK	ZH	ZG			F-14	7
9	COVER, R. BODY	83500-K93-N00	ZN	ZN	ZN			F-15	3
10	COVER, R. FR.	64201-K93-N00	ZK	ZH	ZG			F-12	4
11	COVER, R. UNDER SIDE	64421-K93-N00	ZK	ZH	ZG			F-14	5
12	COVER, RR. CENTER	83750-K93-N00	ZK	ZK	ZK			F-15	4
13	COVER, CENTER	80151-K93-N00	ZM	ZK	ZQ			F-15	2
14	COVER, INNER UPPER	81134-K93-N00	ZL	ZL	ZL			F-12	15
15	COVER, MUFFLER	18318-K93-N00	ZK	ZK	ZK			F-30	4
16	COVER, RR. CENTER LOWER	83650-K93-N00	ZN	ZN	ZN			F-15	6
17	COVER, UNDER	64340-K93-N00	ZB	ZB	ZB			F-14	4
18	FENDER, FR.	61100-K93-N00	ZN	ZM	ZL			F-11	1
19	HOOK, LUGGAGE	81132-GAH-000	YV	YV	YV			F-12	13
20	HOUSING COMP., STARTER SWITCH	35165-K93-N01	ZA	ZA	ZA			F-4-10	6

SCOOPY eSP TIPE SPORTY (ACF110CBTJ).....2IN

No.	MODEL		ACF110CBTJ (TIPE SPORTY)						
	WARNA		Black	Ross white	Winning red	Model yang berlaku		No. blok yang berlaku	No. Ref.
	KODE		NH-1	NH-196	R-258	Model pertama yang berlaku	Model akhir yang berlaku		
	Nama parts berwarna	No. dasar part	NH1	NH196	R258				
21	HOUSING COMP., WINKER SWITCH	35205-K93-N01	ZA	ZA	ZA			F-4-10	12
22	HOUSING, STARTER SWITCH RR.	35164-K93-N01	ZB	ZB	ZB			F-4-10	5
23	HOUSING, WINKER SWITCH RR.	35202-K16-A41	ZC	ZC	ZC			F-4-10	11
24	KNOB, POCKET LID	81144-K93-N00	ZB	ZB	ZB			F-12	18
25	LID, BATTERY	64460-K93-N00	ZC	ZC	ZC			F-14	9
26	LID, L. POCKET	81142-K93-N00	ZH	ZJ	ZH			F-12	17
27	MARK	86649-K93-N40	ZC	ZA	ZB			F-48-4	8
28	MARK	86836-K93-N00	ZA	ZA	ZA			F-48-4	16
29	MARK, ALARM SYSTEM	86811-K93-N00	ZA	ZA	ZA			F-48-4	11
30	MARK, HONDA	86101-K93-N00	ZE	ZE	ZE			F-48-4	1
31	MARK, HONDA	86101-K93-N00	ZE	ZE	ZE			F-48-4	2
32	MIRROR COMP.	88211-K93-N00	ZC	ZD	ZC			F-4-10	28
33	PLUG, HOLE	90656-GCC-000	ZE	ZE	ZE			F-24	16
34	RAIL, RR. GRAB	50410-K93-N00	ZD	ZD	ZD			F-24	1
35	SEAT COMP., DOUBLE	77200-K93-N00	ZB	ZB	ZB			F-24	3
36	STEP, FLOOR	64310-K93-N00	ZC	ZC	ZC			F-14	1
37	STRIPE SET, L.	871X0-K93-N40	ZCL	ZAL	ZBL			F-48-4	4
38	STRIPE SET, R.	871X0-K93-N40	ZCR	ZAR	ZBR			F-48-4	5
39	WHEEL SUB ASSY., FR.	44650-K93-N00	ZA	ZA	ZA			F-20-40	6
40	WHEEL SUB ASSY., RR.	42650-K93-N00	ZA	ZA	ZA			F-22-30	2

SCOOPY eSP TIPE STYLISH (ACF110CBTJ).....IN

No.	MODEL		ACF110CBTJ (TIPE STYLISH)							
	WARNA		Pearl fadelees white	Black	Mat solar red metallic	Mat jasper brown metallic	Model yang berlaku		No. blok yang berlaku	No. Ref.
	KODE		NH-341P	NH-1	R378M	YR-342M	Model pertama yang berlaku	Model akhir yang berlaku		
	Nama parts berwarna	No. dasar part	NH341	NH1	R378	YR342				
1	COVER B, SPEEDOMETER	53206-K93-N00	ZL	ZL	ZL	ZL			F-2	5
2	COVER, SPEEDOMETER RING	53207-K93-N00	PFW	FMB	MSR	MJB			F-2	7
3	COVER A, SPEEDOMETER	53205-K93-N00	ZL	ZK	ZL	ZL			F-2	6
4	COVER, FR. TOP	64301-K93-N00	ZR	ZP	ZQ	ZL			F-12	8
5	COVER, INNER	81141-K93-N00	ZJ	ZL	ZJ	ZJ			F-12	16
6	COVER, L. BODY	83600-K93-N00	ZQ	ZN	ZP	ZK			F-15	5
7	COVER, L. FR.	64202-K93-N00	ZQ	ZK	ZP	ZN			F-12	7
8	COVER, L. UNDER SIDE	64431-K93-N00	ZQ	ZK	ZP	ZN			F-14	7
9	COVER, R. BODY	83500-K93-N00	ZQ	ZN	ZP	ZK			F-15	3
10	COVER, R. FR.	64201-K93-N00	ZQ	ZK	ZP	ZN			F-12	4
11	COVER, R. UNDER SIDE	64421-K93-N00	ZQ	ZK	ZP	ZN			F-14	5
12	COVER, RR. CENTER	83750-K93-N00	ZN	ZK	ZM	ZL			F-15	4
13	COVER, CENTER	80151-K93-N00	ZM	ZL	ZM	ZM			F-15	2
14	COVER, INNER UPPER	81134-K93-N00	ZL	ZK	ZL	ZL			F-12	15
15	COVER, MUFFLER	18318-K93-N00	ZK	ZK	ZK	ZK			F-30	4
16	COVER, RR. CENTER LOWER	83650-K93-N00	ZR	ZN	ZQ	ZP			F-15	6
17	COVER, UNDER	64340-K93-N00	ZB	ZB	ZB	ZB			F-14	4
18	FENDER, FR.	61100-K93-N00	ZQ	ZN	ZP	ZK			F-11	1
19	HOOK, LUGGAGE	81132-GAH-000	YV	YV	YV	YV			F-12	13
20	HOUSING COMP., STARTER SWITCH	35165-K93-N01	ZA	ZA	ZA	ZA			F-4-10	6

SCOOPY eSP TIPE STYLISH (ACF110CBTJ).....IN

No.	MODEL		ACF110CBTJ (TIPE STYLISH)							
	WARNA		Pearl fadelees white	Black	Mat solar red metallic	Mat jasper brown metallic	Model yang berlaku		No. blok yang berlaku	No. Ref.
	KODE		NH-341P	NH-1	R378M	YR-342M	Model pertama yang berlaku	Model akhir yang berlaku		
	Nama parts berwarna	No. dasar part	NH341	NH1	R378	YR342				
21	HOUSING COMP., WINKER SWITCH	35205-K93-N01	ZA	ZA	ZA	ZA			F-4-10	12
22	HOUSING, STARTER SWITCH RR.	35164-K93-N01	ZB	ZB	ZB	ZB			F-4-10	5
23	HOUSING, WINKER SWITCH RR.	35202-K16-A41	ZC	ZC	ZC	ZC			F-4-10	11
24	KNOB, POCKET LID	81144-K93-N00	ZB	ZB	ZB	ZB			F-12	18
25	LID, BATTERY	64460-K93-N00	ZB	ZB	ZB	ZB			F-14	9
26	LID, L. POCKET	81142-K93-N00	ZM	ZK	ZL	ZG			F-12	17
27	MARK	86649-K93-N30	ZA	ZD	ZB	ZC			F-48-3	6
28	MARK	86836-K93-N00	ZA	ZA	ZA	ZA			F-48-3	8
29	MARK, ALARM SYSTEM	86811-K93-N00	ZA	ZA	ZA	ZA			F-48-3	7
30	MARK, HONDA	86101-K93-N00	ZA	-	ZA	ZA			F-48-3	1
31	MARK, HONDA	86101-K93-N30	-	ZA	-	-			F-48-3	1
32	MARK, HONDA	86101-K93-N30	ZB	ZE	ZC	ZD			F-48-3	2
33	MIRROR COMP.	88211-K93-N00	ZG	ZE	ZF	ZB			F-4-10	28
34	PLUG, HOLE	90656-GCC-000	ZE	ZE	ZE	ZE			F-24	16
35	RAIL, RR. GRAB	50410-K93-N00	ZE	ZE	ZE	ZE			F-24	1
36	SEAT COMP., DOUBLE	77200-K93-N00	ZA	ZA	ZA	ZA			F-24	3
37	STEP, FLOOR	64310-K93-N00	ZB	ZB	ZB	ZB			F-14	1
38	STRIPE SET, L.	871X0-K93-N30	ZAL	ZDL	ZBL	ZCL			F-48-3	4
39	STRIPE SET, R.	871X0-K93-N30	ZAR	ZDR	ZBR	ZCR			F-48-3	5
40	WHEEL SUB ASSY., FR.	44650-K93-N00	ZB	ZB	ZB	ZB			F-20-40	6
41	WHEEL SUB ASSY., RR.	42650-K93-N00	ZB	ZB	ZB	ZB			F-22-30	2

Selang bahan bakar, selang untuk keperluan umum dan selang vinyl

- Selang bahan bakar, selang pemakaian umum dan selang vinyl yang standard dapat diganti dengan part borongan yang dijual dalam bentuk gulungan.
- Sewaktu memesan part pengganti untuk selang bahan bakar, selang pemakaian umum dan selang vinyl yang standard, pakailah nomor part borongan yang dicantumkan pada parts catalog dalam tanda kurung ( ) di bawah nama part, atau pakailah catalog di bawah.
  (Panjang standard part borongan adalah 1 m, akan tetapi, yang dicantumkan di dalam catalog dengan < > tersedia dalam panjang 3 m dan 8 m)
- Sewaktu akan memasang selang borongan pengganti, potong dalam panjang yang sama seperti pada part standard.
  (Untuk cara pemotongan part borongan, dan cara pemesanan dsb., bacalah manual servis dan instruksi yang diberikan pada part borongan)
- Daftar di bawah adalah catalog dari nomor part standard dan nomor part borongan. Perhatikan bahwa nomor-nomor itu hanya berlaku untuk part pengganti yang terdaftar saja.

Selang/Pipa bahan bakar			
No part standard	No. part borongan	Part borongan	
		Diameter dalam (mm)	Panjang (m)
95001-30xxx-2x	95001-30001-20M	3,0	1
95001-30xxx-3x	95001-30001-30M	3,0	1
95001-30xxx-4x	95001-30001-40M	3,0	1
95001-35xxx-2x	95001-35001-50M <95001-35003-50M>	3,5	1 3
95001-35xxx-3x	95001-35001-60M <95001-35003-60M>	3,5	1
95001-35xxx-4x	95001-35001-60M <95001-35003-60M>	3,5	1 3
95001-35xxx-5x	95001-35001-50M <95001-35003-50M>	3,5	1 3
95001-35xxx-6x	95001-35001-60M <95001-35003-60M>	3,5	1 3
95001-45xxx-2x	95001-45001-50M <95001-45003-50M>	4,5	1 3
95001-45xxx-3x	95001-45001-60M <95001-45003-60M> <95001-45008-60M>	4,5	1 3 8
95001-45xxx-4x	95001-45001-60M <95001-45003-60M> <95001-45008-60M>	4,5	1 3 8
95001-45xxx-5x	95001-45001-50M <95001-45003-50M>	4,5	1 3
95001-45xxx-6x	95001-45001-60M <95001-45003-60M> <95001-45008-60M>	4,5	1 3 8
95001-55xxx-2x	95001-55001-50M <95001-55003-50M> <95001-55008-50M>	5,5	1 3 8

Selang/Pipa bahan bakar			
No part standard	No. part borongan	Part borongan	
		Diameter dalam (mm)	Panjang (m)
95001-55xxx-3x	95001-55001-60M <95001-55003-60M> <95001-55008-60M>	5,5	1 3 8
95001-55xxx-4x	95001-55001-60M <95001-55003-60M> <95001-55008-60M>	5,5	1 3 8
95001-55xxx-5x	95001-55001-50M <95001-55003-50M> <95001-55008-50M>	5,5	1 3 8
95001-55xxx-6x	95001-55001-60M <95001-55003-60M> <95001-55008-60M>	5,5	1 3 8
95001-75xxx-2x	95001-75001-50M <95001-75003-50M>	7,5	1 3
95001-75xxx-3x	95001-75001-60M <95001-75003-60M> <95001-75008-60M>	7,5	1 3 8
95001-75xxx-4x	95001-75001-60M <95001-75003-60M> <95001-75008-60M>	7,5	1 3 8
95001-75xxx-5x	95001-75001-50M <95001-75003-50M>	7,5	1 3
95001-75xxx-6x	95001-75001-60M <95001-75003-60M> <95001-75008-60M>	7,5	1 3 8
95001-80xxx-2x	95001-80001-50M	8,0	1
95001-80xxx-3x	95001-80001-60M	8,0	1
95001-80xxx-4x	95001-80001-60M	8,0	1
95001-80xxx-5x	95001-80001-50M	8,0	1
95001-80xxx-6x	95001-80001-60M	8,0	1

Pipa vinyl				
No part standard	No. part borongan	Part borongan		
		Diameter dalam (mm)	Diameter dalam (mm)	Panjang (m)
95003-01xxx-3x	95003-01001-60M <95003-01003-60M>	2,9	6,8	1 3
95003-01xxx-60	95003-01001-60M <95003-01003-60M>	2,9	6,8	1 3
95003-03xxx-3x	95003-03001-60M <95003-03003-60M>	3,0	6,0	1 3
95003-03xxx-60	95003-03001-60M <95003-03003-60M>	3,0	6,0	1 3
95003-05xxx-3x	95003-05001-60M <95003-05003-60M> <95003-05008-60M>	3,5	6,5	1 3 8
95003-05xxx-60	95003-05001-60M <95003-05003-60M> <95003-05008-60M>	3,5	6,5	1 3 8
95003-07xxx-1x	95003-07001-10M <95003-07003-10M> <95003-07008-10M>	4,0	7,0	1 3 8
95003-07xxx-20	95003-07001-10M <95003-07003-10M> <95003-07008-10M>	4,0	7,0	1 3 8
95003-07xxx-3x	95003-07001-60M <95003-07003-60M> <95003-07008-60M>	4,0	7,0	1 3 8
95003-07xxx-60	95003-07001-60M <95003-07003-60M> <95003-07008-60M>	4,0	7,0	1 3 8
95003-07xxx-7x	95003-07001-70M <95003-07003-70M> <95003-07008-70M>	4,0	7,0	1 3 8
95003-08xxx-1x	95003-08001-10M <95003-08003-10M> <95003-08008-10M>	4,5	6,5	1 3 8
95003-09xxx-3x	95003-09001-60M <95003-09003-60M>	4,5	8,0	1 3
95003-09xxx-60	95003-09001-60M <95003-09003-60M>	4,5	8,0	1 3
95003-10xxx-1x	95003-10001-10M <95003-10003-10M>	5,0	8,0	1 3
95003-10xxx-20	95003-10001-10M <95003-10003-10M>	5,0	8,0	1
95003-10xxx-3x	95003-10001-60M <95003-10003-60M>	5,0	8,0	1 3
95003-10xxx-60	95003-10001-60M <95003-10003-60M>	5,0	8,0	1 3
95003-11xxx-3x	95003-11001-60M <95003-11003-60M> <95003-11008-60M>	5,0	9,0	1 3 8
95003-11xxx-60	95003-11001-60M <95003-11003-60M> <95003-11008-60M>	5,0	9,0	1 3 8
95003-12xxx-1x	95003-12001-10M <95003-12003-10M> <95003-12008-10M>	5,0	7,0	1 3 8
95003-12xxx-20	95003-12001-10M <95003-12003-10M> <95003-12008-10M>	5,0	7,0	1 3 8

Pipa vinyl				
No part standard	No. part borongan	Part borongan		
		Diameter dalam (mm)	Diameter dalam (mm)	Panjang (m)
95003-14xxx-1x	95003-14001-10M <95003-14003-10M>	6,0	9,0	1 3
95003-14xxx-20	95003-14001-10M <95003-14003-10M>	6,0	9,0	1 3
95003-14xxx-3x	95003-14001-60M <95003-14003-60M>	6,0	9,0	1 3
95003-17xxx-1x	95003-17001-10M <95003-17003-10M>	7,0	9,0	1 3
95003-19xxx-1x	95003-19001-10M <95003-19003-10M> <95003-19008-10M>	7,0	11,0	1 3 8
95003-19xxx-20	95003-19001-10M <95003-19003-10M> <95003-19008-10M>	7,0	11,0	1 3 8
95003-19xxx-3x	95003-19001-60M <95003-19003-60M> <95003-19008-60M>	7,0	11,0	1 3 8
95003-19xxx-60	95003-19001-60M <95003-19003-60M> <95003-19008-60M>	7,0	11,0	1 3 8
95003-21xxx-1x	95003-21001-10M <95003-21003-10M>	8,0	9,0	1
95003-21xxx-20	95003-21001-10M <95003-21003-10M>	6,0	9,0	1 3
95003-23xxx-1x	95003-23001-10M <95003-23003-10M>	8,0	12,0	1 3
95003-23xxx-20	95003-23001-10M <95003-23003-10M>	8,0	12,0	1 3
95003-23xxx-3x	95003-23001-60M <95003-23003-60M> <95003-23008-60M>	8,0	12,0	1 3 8
95003-23xxx-60	95003-23001-60M <95003-23003-60M> <95003-23008-60M>	8,0	12,0	1 3 8
95003-25xxx-1x	95003-25001-10M <95003-25003-10M>	9,0	11,0	1 3
95003-25xxx-20	95003-25001-10M <95003-25003-10M>	9,0	11,0	1 3
95003-25xxx-3x	95003-25001-60M <95003-25003-60M>	9,0	11,0	1 3
95003-25xxx-7x	95003-25001-70M <95003-25003-70M>	9,0	11,0	1 3
95003-27xxx-1x	95003-27001-10M <95003-27003-10M>	9,0	13,0	1 3
95003-27xxx-20	95003-27001-10M <95003-27003-10M>	9,0	13,0	1 3
95003-27xxx-3x	95003-27001-60M <95003-27003-60M>	9,0	13,0	1 3
95003-27xxx-60	95003-27001-60M <95003-27003-60M>	9,0	13,0	1 3
95003-33xxx-1x	95003-33001-10M <95003-33003-10M>	10,0	14,0	1 3
95003-33xxx-20	95003-33001-10M <95003-33003-10M>	10,0	14,0	1 3

Pipa vinyl				
No part standard	No. part borongan	Part borongan		
		Diameter dalam (mm)	Diameter dalam (mm)	Panjang (m)
95003-36xxx-1x	95003-36001-10M <95003-36003-10M> <95003-36008-10M>	11,0	13,0	1 3 8
95003-36xxx-20	95003-36001-10M <95003-36003-10M> <95003-36008-10M>	11,0	13,0	1 3 8
95003-37xxx-3x	95003-37001-60M 95003-37003-60M>	11,0	15,0	1 3
95003-37xxx-60	95003-37001-60M <95003-37003-60M>	11,0	15,0	1 3
95003-38xxx-1x	95003-38001-10M <95003-38003-10M>	12,0	13,0	1 3
95003-38xxx-20	95003-38001-10M <95003-38003-10M>	12,0	13,0	1 3
95003-39xxx-1x	95003-39001-10M <95003-39003-10M>	12,0	14,0	1 3
95003-39xxx-20	95003-39001-10M <95003-39003-10M>	12,0	14,0	1 3
95003-40xxx-20	95003-40001-10M <95003-40003-10M>	12,0	16,0	1 3
95003-40xxx-3x	95003-40001-60M <95003-40003-60M>	12,0	16,0	1 3
95003-40xxx-60	95003-40001-60M <95003-40003-60M>	12,0	16,0	1 3
95003-43xxx-1x	95003-43001-10M <95003-43003-10M> <95003-43008-10M>	13,0	15,0	1 3 8
95003-43xxx-20	95003-43001-10M <95003-43003-10M> <95003-43008-10M>	13,0	15,0	1 3 8
95003-45xxx-1x	95003-45001-10M <95003-45003-10M> <95003-45008-10M>	14,0	18,0	1 3 8
95003-45xxx-20	95003-45001-10M <95003-45003-10M> <95003-45008-10M>	14,0	18,0	1 3 8
95003-50xxx-1x	95003-50001-10M <95003-50003-10M>	16,0	19,0	1 3
95003-50xxx-20	95003-50001-10M <95003-50003-10M>	16,0	19,0	1 3
95003-50xxx-3x	95003-50001-60M <95003-50003-60M>	16,0	19,0	1 3
95003-55xxx-1x	95003-55001-10M <95003-55003-10M>	17,5	20,5	1 3
95003-55xxx-20	95003-55001-10M <95003-55003-10M>	17,5	20,5	1 3
95003-60xxx-1x	95003-60001-10M <95003-60003-10M>	22,0	27,0	1 3
95003-60xxx-20	95003-60001-10M <95003-60003-10M>	22,0	27,0	1 3
95003-60xxx-3x	95003-60001-60M <95003-60003-60M>	22,0	27,0	1 3
95003-60xxx-60	95003-60001-60M <95003-60003-60M>	22,0	27,0	1 3

Selang pemakaian umum			
No part standard	No. part borongan	Part borongan	
		Diameter dalam (mm)	Panjang (m)
95005-11xxx-3x	95005-11001-30M	11,0	1
95005-11xxx-5x	95005-11001-50M	11,0	1
95005-12xxx-1x	95005-12001-10M <95005-12003-10M>	12,0	1 3
95005-12xxx-2x	95005-12001-20M	12,0	1
95005-12xxx-3x	95005-12001-30M	12,0	1
95005-12xxx-5x	95005-12001-50M	12,0	1
95005-14xxx-1x	95005-14001-10M	14,0	1
95005-14xxx-2x	95005-14001-20M <95005-14003-20M>	14,0	1 3
95005-14xxx-3x	95005-14001-30M	14,0	1
95005-14xxx-5x	95005-14001-50M	14,0	1
95005-17xxx-1x	95005-17001-10M	17,0	1
95005-17xxx-2x	95005-17001-20M	17,0	1
95005-17xxx-3x	95005-17001-30M	17,0	1
95005-17xxx-5x	95005-17001-50M	17,0	1
95005-30xxx-3x	95005-30001-30M	3,0	1
95005-30xxx-5x	95005-30001-50M	3,0	1
95005-35xxx-1x	95005-35001-10M <95005-35003-10M> <95005-35008-10M>	3,5	1 3 8
95005-35xxx-2x	95005-35001-20M	3,5	1
95005-35xxx-3x	95005-35001-30M	3,5	1
95005-35xxx-4x	95005-35001-10M <95005-35003-10M> <95005-35008-10M>	3,5	1 3 8
95005-35xxx-5x	95005-35001-50M	3,5	1
95005-45xxx-1x	95005-45001-10M <95005-45003-10M> <95005-45008-10M>	4,5	1 3 8
95005-45xxx-2x	95005-45001-20M	4,5	1
95005-45xxx-3x	95005-45001-30M	4,5	1

Selang pemakaian umum			
No part standard	No. part borongan	Part borongan	
		Diameter dalam (mm)	Panjang (m)
95005-45xxx-4x	95005-45001-10M <95005-45003-10M> <95005-45008-10M>	4,5	1 3 8
95005-45xxx-5x	95005-45001-50M	4,5	1
95005-50xxx-3x	95005-50001-30M <95005-50003-30M>	5,0	1 3
95005-50xxx-5x	95005-50001-50M	5,0	1
95005-55xxx-1x	95005-55001-10M <95005-55003-10M> <95005-55008-10M>	5,3	1 3 8
95005-55xxx-2x	95005-55001-20M <95005-55003-20M>	5,3	1 3
95005-55xxx-4x	95005-55001-10M <95005-55003-10M> <95005-55008-10M>	5,3	1 3 8
95005-65xxx-1x	95005-65001-10M <95005-65003-10M>	6,5	1 3
95005-65xxx-2x	95005-65001-20M	6,5	1
95005-70xxx-3x	95005-70001-30M <95005-70003-30M>	7,0	1 3
95005-70xxx-5x	95005-70001-50M	7,0	1
95005-75xxx-1x	95005-75001-10M <95005-75003-10M>	7,3	1 3
95005-75xxx-2x	95005-75001-20M	7,3	1
95005-80xxx-1x	95005-80001-10M <95005-80003-10M>	8,0	1 3
95005-80xxx-2x	95005-80001-20M	8,0	1
95005-80xxx-3x	95005-80001-30M	8,0	1
95005-80xxx-5x	95005-80001-50M	8,0	1
95005-91xxx-3x	95005-91001-30M	12,0	1
95005-91xxx-5x	95005-91001-50M	12,0	1
95005-92xxx-3x	95005-92001-30M	12,0	1
95005-92xxx-5x	95005-92001-50M	12,0	1

CATATAN: X ditampilkan untuk mewakili angka yang dihilangkan dan huruf-huruf alfabet romawi.

HATI-HATI : BERBAHAYA sekali apabila selang bahan bakar tertukar dengan selang pemakaian umum atau selang vinyl.
Jangan sekali-kali menggunakan selang pemakaian umum atau selang vinyl sebagai pengganti selang bahan bakar atau sebaliknya. Selalu pakai nomor part borongan yang tepat pada parts catalog, mengikuti service manual atau instruksi-instruksi yang menyertai part borongan.

- **Nomor part borongan untuk selang bahan bakar, selang pemakaian umum dan selang vinyl.**

(Contoh)

95001-75001-50M

Nomor part borongan: Menunjuk ke part borongan.

Kode penandaan (tipe selang): (selang bahan bakar dan selang pemakaian umum).

Ubah kode (untuk selang tambahan): (Selang vinyl)

- Menunjukkan tanda nomor atau urutan perubahan, namun, kode untuk part borongan harus benar- benar 0 (nol).

Tipe kode:

Selang bahan bakar
- 2: Kepangan merah di luar (dia. dalam 3 mm saja)
- 5: Kepangan hitam di dalam
- 3: Merah (dia. dalam 3 mm saja)
- 4: Abu-abu dengan garis merah (dia. dalam 3 mm saja)
- 6: Hitam

• Selang vinyl
- 1: Tembus pandang
- 2: Hitam
- 3: Merah muda
- 6: Merah muda
- 7: Hitam pucat

• Selang umum
- 1: Abu-abu
- 2: Abu-abu
- 3: Hitam
- 5: Hitam

Panjang:
- 001: 1 m (standard)
- 003: 3 m
- 008: 8 m

Kode D.D.: (selang bahan bakar dan selang pemakaian umum)

30: 3,0 mm	11: 11 mm
35: 3,5 mm	91: 12 mm (dia. luar 15) mm
45: 4,5 mm	92: 12 mm (dia. luar 16) mm
50: 5,0 mm	12: 12 mm (dia. luar 17) mm
55: 5,3 mm, 5,5 mm	14: 14 mm
65: 6,5 mm	17: 17 mm
70: 7,0 mm	
75: 7,3 mm, 7,5 mm	
80: 8,0 mm	

Kode DD./DL.: (selang vinyl)

01: ID. 2,9	OD. 6,8 mm	14: ID. 6,0	OD. 9,0 mm	37: ID. 11,0	OD. 15,0 mm
03: ID. 3,0	OD. 6,0 mm	17: ID. 7,0	OD. 9,0 mm	38: ID. 12,0	OD. 13,0 mm
05: ID. 3,5	OD. 6,5 mm	19: ID. 7,0	OD. 11,0 mm	39: ID. 12,0	OD. 14,0 mm
07: ID. 4,0	OD. 7,0 mm	21: ID. 8,0	OD. 9,0 mm	40: ID. 12,0	OD. 16,0 mm
08: ID. 4,5	OD. 6,5 mm	23: ID. 8,0	OD. 12,0 mm	43: ID. 13,0	OD. 15,0 mm
09: ID. 4,5	OD. 8,0 mm	25: ID. 9,0	OD. 11,0 mm	45: ID. 14,0	OD. 18,0 mm
12: ID. 5,0	OD. 7,0 mm	27: ID. 9,0	OD. 13,0 mm	50: ID. 16,0	OD. 19,0 mm
10: ID. 5,0	OD. 8,0 mm	33: ID. 10,0	OD. 14,0 mm	55: ID. 17,5	OD. 20,5 mm
11: ID. 5,0	OD. 9,0 mm	36: ID. 11,0	OD. 13,0 mm	60: ID. 22,0	OD. 27,0 mm

Tipe selang:
- 1: Selang bahan bakar
- 3: Selang vinyl
- 5: Selang umum

FLAT RATE SERVICE TIME

Flat rate service time (FRT) adalah waktu standard yang diperlukan untuk menyervis sebuah sepeda motor/skuter, yang terdaftar di dalam parts catalog ini untuk membantu AHASS mengontrol proses kerja yang sesungguhnya dan menghitung biaya servis dengan memakai FRT sebagai patokan.

Sistem penentuan FRT

- Waktu servis sesungguhnya
  - Pelepasan, Pembongkaran/perakitan kembali, Pemasangan
  - Pemeriksaan, Pengukuran, Penyetelan, Konfirmasi
  - Pendiagnosaan/troubleshooting (Sistem kelistrikan)
  - Pemeriksaan akhir
- Waktu jeda
  - Persiapan
    (Pemeriksaan proses, Konfirmasi penyusunan tools yang diperlukan).
  - Pekerjaan yang berhubungan (Pemindahan kendaraan).

* Waktu jeda ditentukan dengan mengalikan waktu servis sesungguhnya dengan koefisien tertentu.

Metode Penulisan

Bagian-bagian yang diservis yang diperlihatkan di dalam teks yang tercantum dengan waktu pekerjaan part-part yang diganti sebagai subyeknya. Bagian-bagian lain yang diservis yang tidak menggunakan penggantian parts (pelepasan/pemasangan, penyetelan, pemeriksaan/pengukuran, dan pekerjaan lain) tercantum secara bersama pada bagian pendahuluan yang digolongkan menurut jenis pekerjaan.

Standard penentuan FRT

- Sistem desimal (dalam satuan 0,1) dipakai untuk menentukan FRT oleh karena mudah untuk menghitung upah.
  Contoh: (0,1) → 6 menit, (0,2) → 12 menit
  [Ongkos jasa per jam] x [FRT] = [Upah]
- FRT ditentukan dengan tool (perkakas) tangan.
- Bagian-bagian yang diservis dan FRT dapat berubah tergantung pada pengembangan tools dan peralatan servis serta perbaikan pada prosedur servis.

Prosedur kerja

- Oleh karena prosedur kerja ditentukan berdasarkan waktu kerja dengan metode kerja yang diuraikan di dalam Buku Pedoman Reparasi, pakailah Buku ini sebagai pegangan.
- Pekerjaan servis yang memerlukan waktu singkat harus tetap memperhatikan keamanan pekerjaan dan garansi dari sepeda motor/skuter dalam penentuan bagian-bagian yang diservis yang tidak dimuat di dalam Buku Pedoman Reparasi.
- Pada dasarnya pekerjaan dilakukan oleh satu orang, dan apabila diperlukan dua atau lebih orang untuk mengerjakannya, penentuan waktu kerja dilakukan sebagai waktu total untuk sejumlah orang tersebut.
- Nilai yang ditentukan untuk tingkat kemampuan seorang pekerja adalah tiga tahun pengalaman dalam perbaikan kendaraan-kendaraan Honda sebagai standard.
- Special tools dan peralatan servis yang dipakai dalam penentuan FRT adalah yang ditentukan atau dianjurkan di dalam Buku Pedoman Reparasi.

Bagian yang diservis yang tidak ada FRTnya

- Aksesori dan parts yang diservis yang tidak terdaftar di dalam parts catalog ini.
- Lokasi-lokasi yang mengalami sedikit sekali pemburukan kondisi atau kerusakan dalam pemakaian normal.
- Pekerjaan servis yang dapat diselesaikan dengan sekali sentuh.
- Pekerjaan servis yang jarang sekali dilakukan (yaitu yang jarang sekali mengalami masalah dan frekuensi servis).
- Jika FRT tidak tercantum, hitunglah upah kerja berdasarkan perkiraan waktu kerja sesungguhnya.

Pekerjaan yang tidak ada FRTnya

- Pembuangan oli dan cairan coolant, Waktu tunggu untuk pemanasan mesin dan sebagainya.
- Pekerjaan tambahan yang meliputi pelepasan/pemasangan perlengkapan luar yang standard.
- Waktu tidak langsung untuk melakukan servis dengan mendatangi pembeli sepeda motor/skuter, tukar tambah, dan pengiriman sepeda motor/skuter.
- Waktu tidak langsung yang diperlukan untuk pemesanan dan penyerahan parts.
- Ongkos untuk bahan perekat, grease, dsb. yang dipakai untuk pekerjaan servis.

Penjelasan FRT dengan menggunakan contoh
(Contoh mungkin berbeda dari item yang tercantum)

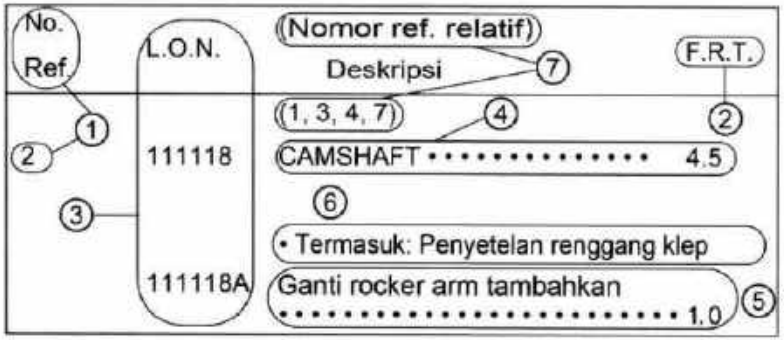

① No. Referensi dari gambar part yang menunjukkan lokasi kerja untuk penggantian.

② FRT adalah singkatan dari Flat Rate Time menunjukkan waktu servis standard yang dibutuhkan untuk penggantian.

③ LON adalah singkatan dari Labor Operation Number, yaitu klasifikasi dari item servis dengan kode unit kerja.

Kode kerja yang sama digunakan tidak tergantung dari model.

Pengerjaan standard ditandai dengan kode 6 digit, dan pengerjaan tambahan ditandai dengan kode 7 digit.

④ Menyatakan penggantian camshaft dan FRT4,5.

⑤ Menyatakan bahwa FRT1,0 akan ditambahkan jika pekerjaan tambahan (penggantian rocker arm) dilakukan sehubungan dengan penggantian camshaft.

⑥ Menyatakan isi pekerjaan yang termasuk di dalam bagian yang diservis.

⑦ Menyatakan No. referensi yang pekerjaan dan waktunya adalah sama dengan FRT4,5 untuk camshaft.

(Daerah jangkauan aplikasi terbatas pada bagian-bagian yang diservis tanpa penentuan LON di dalam blok yang sama)

Cara mencari bagian yang diservis dengan memakai contoh
(penggantian camshaft)

Buka ke halaman blok dimana gambar spare part camshaft diperlihatkan.

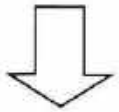

Carilah gambar camshaft, dan carilah bagian yang diservis dan FRT yang sesuai dengan No. referensi.

Tanda penunjuk untuk pencantuman bagian-bagian yang diservis yang terdapat lanjutan pada halaman berikutnya

No. Ref.	L.O.N.	(Nomor ref. relatif) Deskripsi	F.R.T.
2	111118	CAMSHAFT	4.5
	.	.	.
	.	.	.
+			

Tanda yang diperlihatkan pada baris terakhir.

Blok yang tidak ada penentuan FRT

No. Ref.	L.O.N.	(Nomor ref. relatif) Deskripsi	F.R.T.
TIDAK ADA INFORMASI			

- **Sistem kode LON**

1	11	1	18	A
a	b	c	d	e

a) Kode golongan ..... Mesin

b) Kode lokasi/fungsi ..... Bagian atas mesin

c) Kode pekerjaan ..... Ganti

d) Nomor urutan pekerjaan (Kode unit dapat diperlihatkan dengan abjad)
..... camshaft
(Tidak ada aturan kode tetap)

e) Kode tambahan .....Ganti rocker arm
(Tidak ada aturan kode tetap)

1	11	1	18	A
a		c		

a) Kode kategori dan klasifikasi

Kode	Kategori
1	Mesin
2	Transmisi
3	Bahan bakar & Pembuangan gas
4	Rangka & Badan
5	Kemudi/Suspensi
6	Kelistrikan
7	Roda/Rem
8	Alat pengontrol/instrumen
9	-
0	-

c) Kode pekerjaan dan klasifikasi

Kode	Kategori pekerjaan
1	Ganti, Pelepasan/Pemasangan, Ganti
2	Overhaul
3	Setel, Balans
4	(Pekerjaan yang berhubungan dengan pengecatan: Lapisan-atas)
5	Test, Pemeriksaan/diagnosa, Pengukuran, Pemeriksaan
6	(Pekerjaan yang berhubungan dengan overhaul: Rebore = korter)
7	(Pekerjaan yang berhubungan dengan overhaul: Reseal = perapatan kembali)
8	(Resurface = Pembentukan kembali permukaan)
9	(Pekerjaan yang berhubungan dengan pengecatan: Refinish = perhalus permukaan)
0	Perbaikan, Pembersihan, Pembuangan angin palsu

Bagian utama yang diservis tanpa memakai spare parts
Pelepasan/Pemasangan, Penyetelan, Pemeriksaan/Pengukuran, Pekerjaan lain
E: Mesin, F: Rangka

*** PEKERJAAN LAIN SELAIN PENGGANTIAN PARTS**

- **Pelepasan/Pemasangan**

Set untuk konfigurasi dengan parts dilepaskan dari kendaraan.

	LON	DESKRIPSI	FRT
E	1101E5	**MEMIRINGKAN ASSY., MESIN-PELEPASAN/PEMASANGAN** TERMASUK: Semua penyetelan yang diperlukan	1,5
	3111D5	**ASSY., THROTTLE BODY-PELEPASAN/PEMASANGAN**	0,8
	1101E6	**PEMISAHAN CRANKCASE** TERMASUK: Penurunan dan pemasangan mesin	3,5

- **Penyetelan**

	LON	DESKRIPSI	FRT
E	3143A0	**PUTARAN STASIONER MESIN - PENYETELAN**	0,1
	6143A1	**BUSI-PENYETELAN/PEMBERSIHAN**	0,2
	1113A0	**JARAK RENGGANG KLEP-PENYETELAN** CATATAN: Untuk 1 kendaraan	0,4
F	6163A0	**LAMPU DEPAN- MENGARAHKAN**	0,1
	7113A1	**REM BELAKANG - PENYETELAN** TIDAK TERMASUK: Penyetelan kampas rem belakang	0,1
	7113A1A	Penyetelan equalizer tambahkan	0,3
	3113A3	**PENGOPERASIAN GAS-PENYETELAN**	0,1

- **Pemeriksaan/Pengukuran**

	LON	DESKRIPSI	FRT
E	1115A0	**TEKANAN KOMPRESSI-PENGUKURAN**	0,2
	6145A0	**WAKTU PENGAPIAN- PEMERIKSAAN**	0,2
F	6105A0	**BATTERY- PENGISIAN** TERMASUK: Dalam kasus jenis battery terbuka, periksa tinggi permukaan electrolyte dan pengisian	0,2

- **Pekerjaan lain**

	LON	DESKRIPSI	FRT
E	1130A1	**SARINGAN KASA OLI- PEMBERSIHAN**	0,2
F	7110A0	**REM DEPAN-PEMBUANGAN ANGIN PALSU**	0,2
	3115A3	**PENGENALAN INISIALISASI ECM**	0,2
	6155A1	**REGISTRASI REMOTE TRANSMITTER ATAU PENGINTEGRASIAN KUNCI KONTAK**	0,1
	6185A0	**UPDATE ECM/PCM**	0,3

KELOMPOK MESIN

E-1 SHROUD/FAN COVER	E-2 CYLINDER HEAD COVER	E-3 CYLINDER HEAD
E-4 CAMSHAFT/VALVE	E-5 CAM CHAIN/TENSIONER	E-6 CYLINDER
E-10 A.C.G. STARTER	E-11 OIL PUMP	E-13 LEFT SIDE COVER

KELOMPOK MESIN

E-16 DRIVE FACE

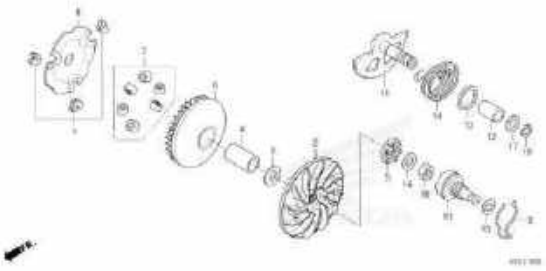

E-17 DRIVEN FACE

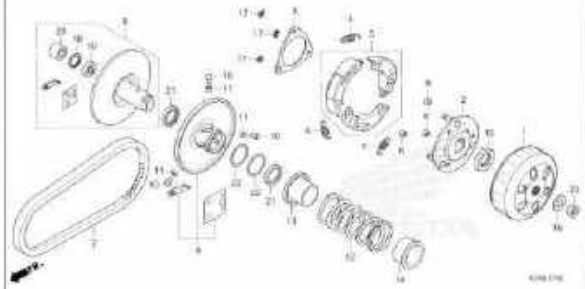

E-17-10 TRANSMISSION

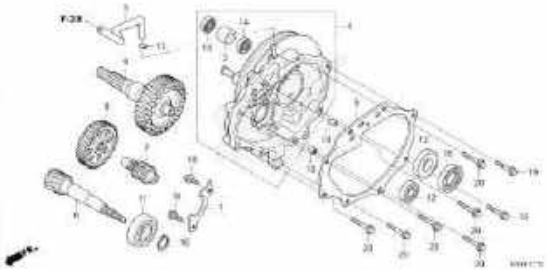

E-19-10 RIGHT CRANKCASE

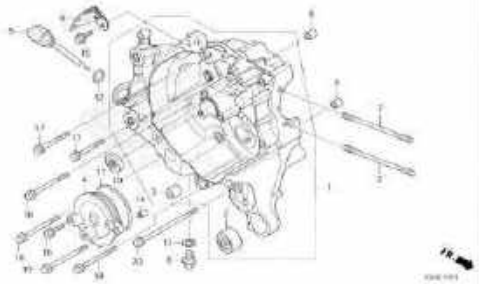

E-19-20 LEFT CRANKCASE

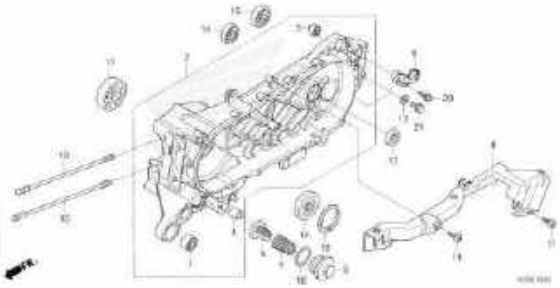

E-20 CRANKSHAFT/PISTON

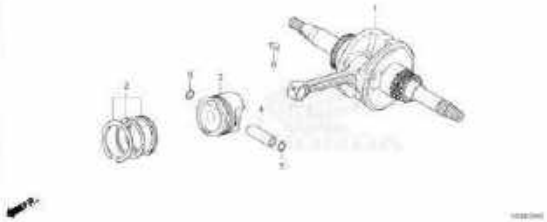

E-22 THROTTLE BODY

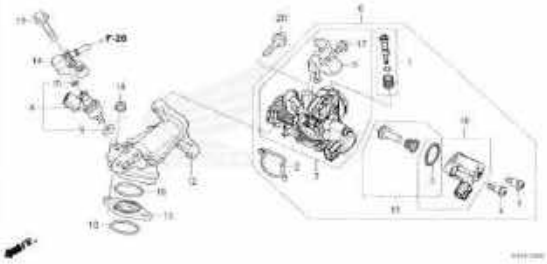

KELOMPOK RANGKA

F-1 HEADLIGHT

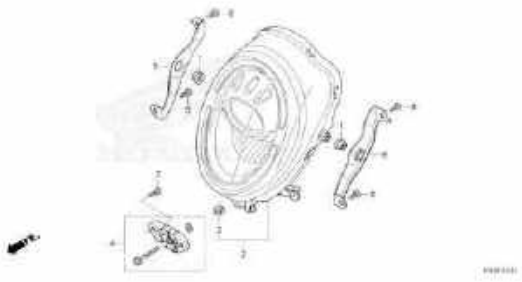

F-2 METER

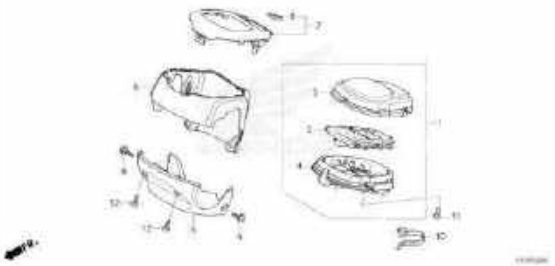

F-4-10 HANDLE LEVER/SWITCH/CABLE

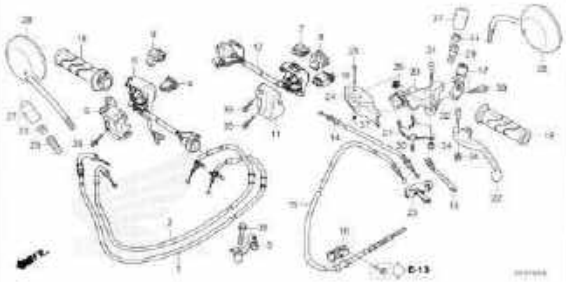

F-5 FRONT BRAKE MASTER CYLINDER

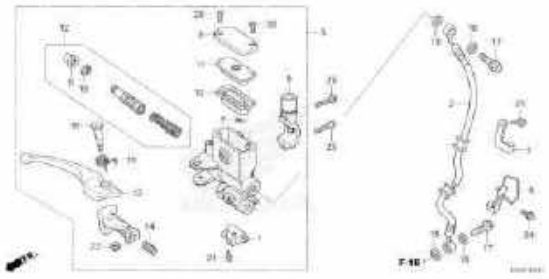

F-9 HANDLE PIPE

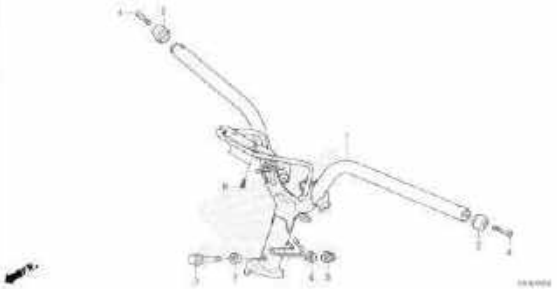

F-10 STEERING STEM

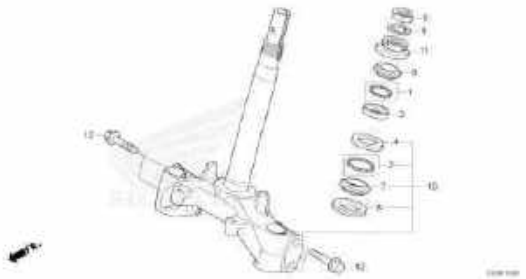

F-11 FRONT FENDER

F-12 FRONT COVER/INNER COVER

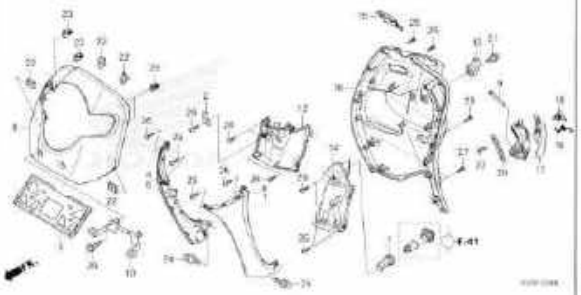

F-14 FLOOR STEP

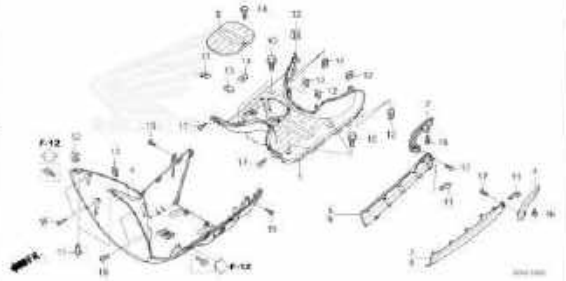

3

KELOMPOK RANGKA

F-14-10 PILLION STEP	F-15 BODY COVER	F-17 FRONT FORK
F-18 FRONT BRAKE CALIPER	F-20-40 FRONT WHEEL	F-22-30 REAR WHEEL
F-24 SEAT/LUGGAGE BOX	F-26 FUEL TANK	F-28 AIR CLEANER

3

KELOMPOK RANGKA

F-30 EXHAUST MUFFLER

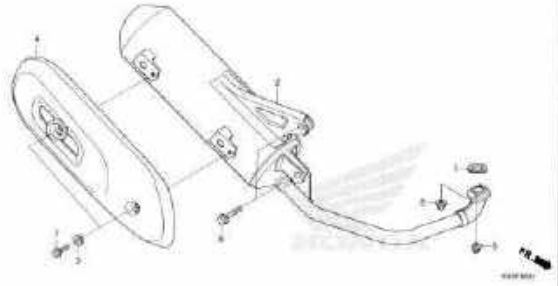

F-35 STAND/KICK STARTER ARM

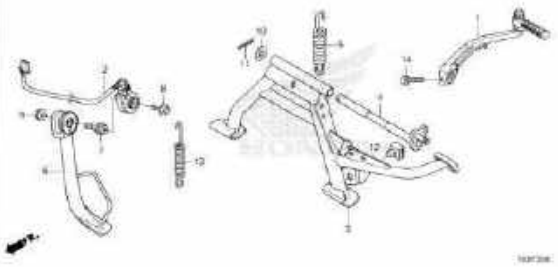

F-36 REAR CUSHION

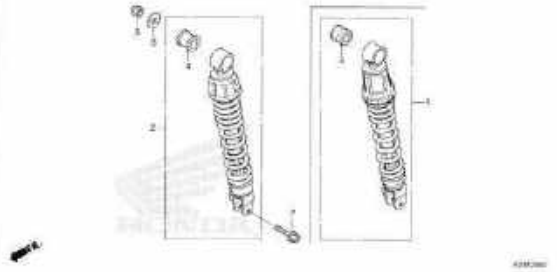

F-37 WINKER

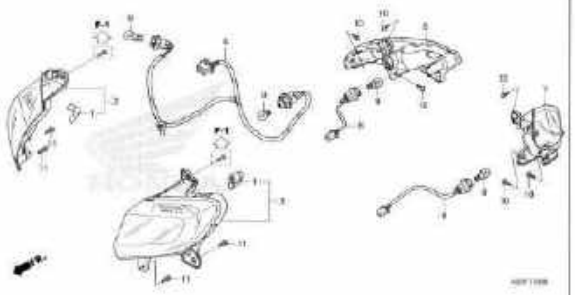

F-38 TAILLIGHT

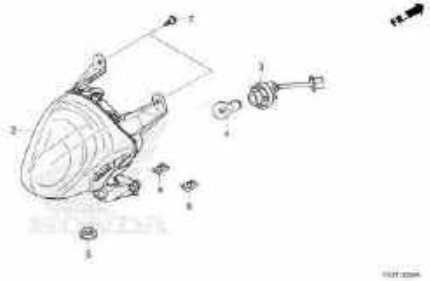

F-39 REAR FENDER

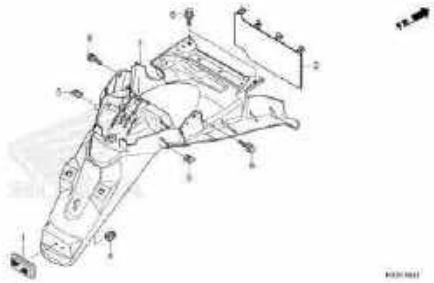

F-40 BATTERY

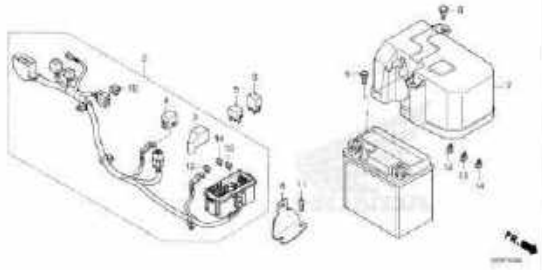

F-41 WIRE HARNESS

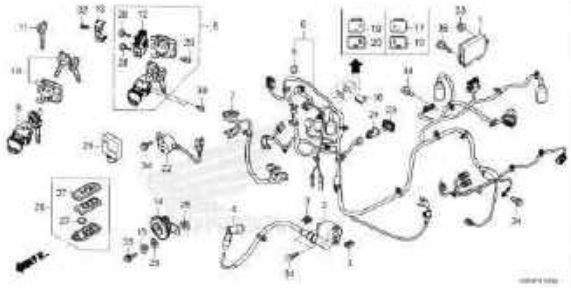

F-42 FRAME BODY

3

KELOMPOK RANGKA

F-46 TOOL

F-47 CAUTION LABEL

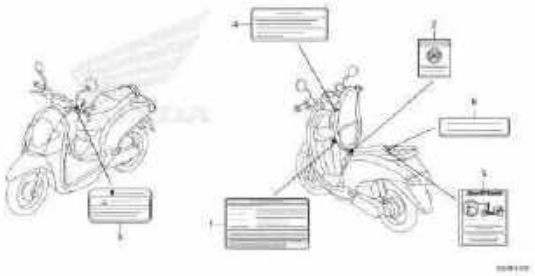

F-48 MARK(ACF110CBTH-IN)

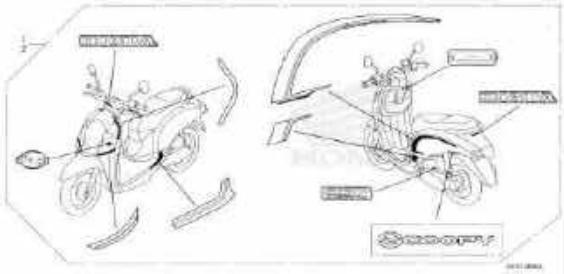

F-48-1 MARK(ACF110CBTH-2IN)

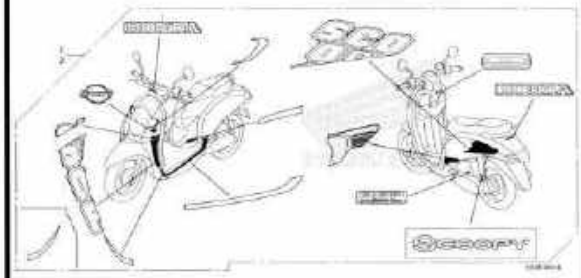

F-48-2 MARK(ACF110CBTH-3IN)

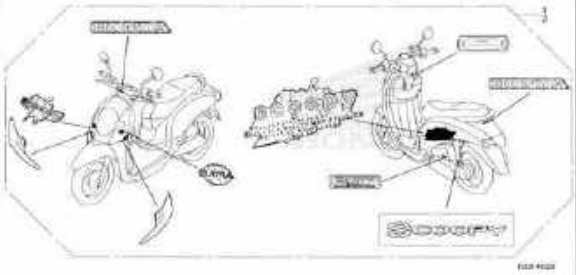

F-48-3 MARK(ACF110CBTJ-IN)

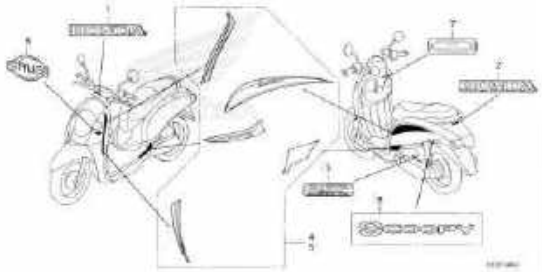

F-48-4 MARK(ACF110CBTJ-2IN)

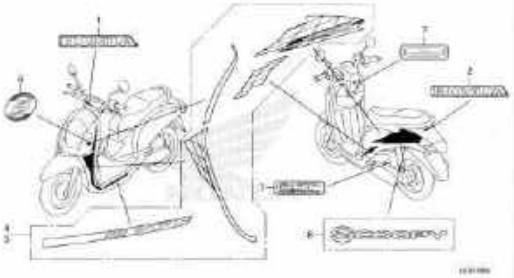

3

E-1 SHROUD/FAN COVER

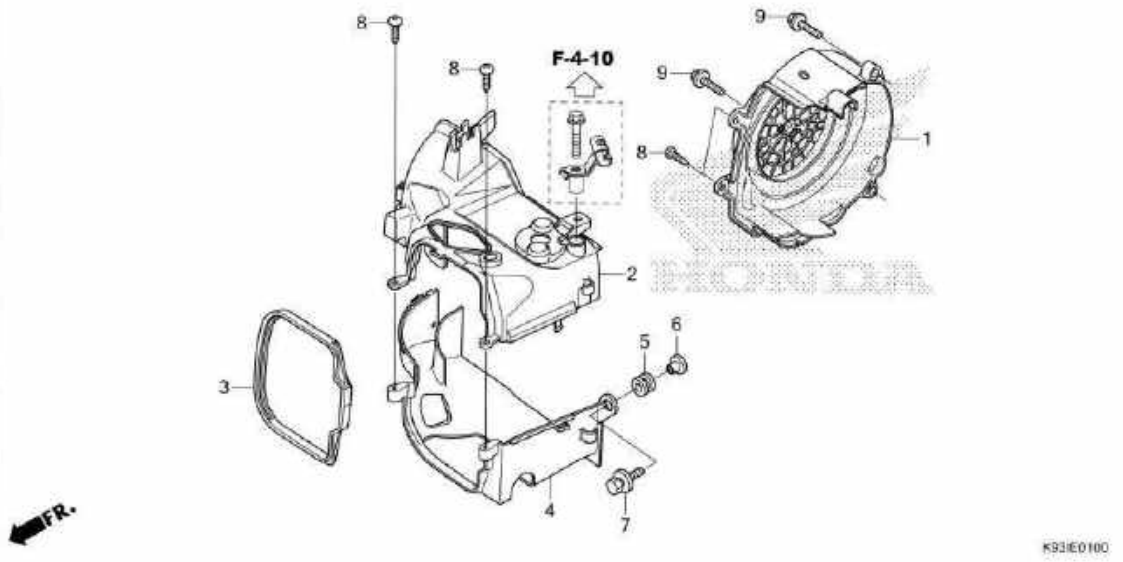

No. Ref.	L.O.N.	(Nomor ref. relatif) Deskripsi	F.R.T.
1	1151ED	COVER, FAN	0,1
2	1111U9	SHROUD, ENGINE :UPPER	1,0
4	1111V0	SHROUD, ENGINE :LOWER	0,9
	1111Y1	SHROUD, ENGINE :KEDUA-DUANYA	1,3

No. Ref.	No. Part	Deskripsi	Jumlah SCOOPY eSP (ACF110) CBS ISS (CBT) 2017(H)	2018(J)	No. Seri	Kode Parts Catalog
1	19610-K44-V00	COVER COMP., FAN	1	1		
2	19621-K81-N00	SHROUD, IN.	1	1		
3	19625-K44-V00	SEAL, SHROUD	1	1		
4	19631-K50-T00	SHROUD, EX.	1	1		
5	19639-GBC-000	RUBBER, MOUNTING	1	1		
6	33715-GB0-900	COLLAR, TAILLIGHT SETTING	1	1		
7	93404-06020-00	BOLT-WASHER, 6X20	1	1		
8	93903-25380	SCREW, TAPPING, 5X16	4	4		
9	96001-06025-07	BOLT, FLANGE, 6X25	2	2		

E-2 CYLINDER HEAD COVER

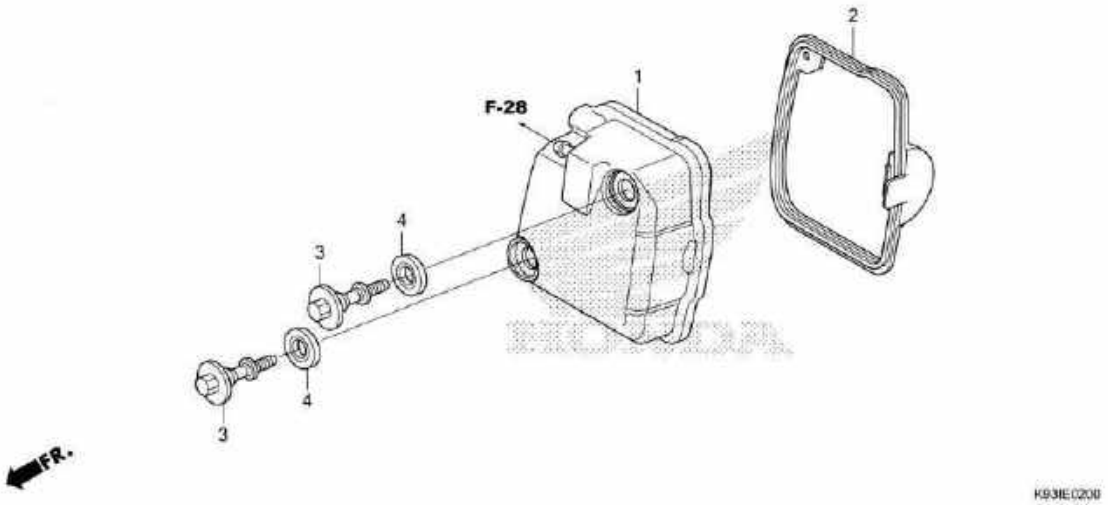

No. Ref.	L.O.N.	(Nomor ref. relatif) Deskripsi	F.R.T.
1	1111C4	COVER, CYLINDER HEAD	0,2
2	1111D2	GASKET, CYLINDER HEAD COVER	0,2

No. Ref.	No. Part	Deskripsi	Jumlah SCOOPY eSP (ACF110) CBS ISS (CBT) 2017(H)	2018(J)	No. Seri	Kode Parts Catalog
1	12310-K44-V00	COVER COMP., HEAD	1	1		
2	12391-K25-601	GASKET, HEAD COVER	1	1		
	12391-K44-V00	GASKET, HEAD COVER	1	1		
3	90017-GCC-000	BOLT, HEAD COVER	2	2		
4	90543-MV9-670	RUBBER, MOUNTING	2	2		

E-3 CYLINDER HEAD

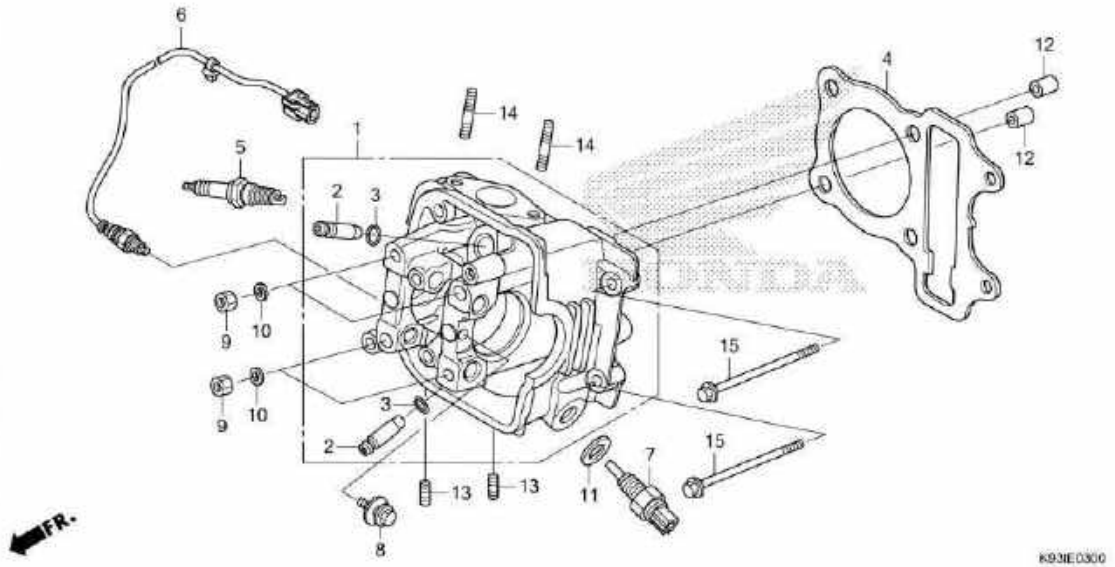

No. Ref.	L.O.N.	(Nomor ref. relatif) Deskripsi	F.R.T.
1	111106	HEAD, CYLINDER	3,5
		.TERMASUK: Penyetelan dan skir klep	
2	1111L9	GUIDE, INTAKE VALVE(SATU)	3,2
		.TERMASUK: Reaming	
		.TERMASUK: Penyetelan dan skir klep	
	1111M0	GUIDE, EXHAUST VALVE(SATU)	3,2
		.TERMASUK: Reaming	
		.TERMASUK: Penyetelan dan skir klep	
	1111M9	GUIDE, VALVE :UNTUK 1 KENDARAAN	3,5
		.TERMASUK: Reaming	
		.TERMASUK: Penyetelan dan skir klep	
4	111115	GASKET, CYLINDER HEAD	2,3
5	614130	PLUG, SPARK	0,2
6	617121	SENSOR, OXYGEN	0,7
7	617151	SENSOR, OIL TEMPERATURE	0,3

No. Ref.	No. Part	Deskripsi	Jumlah SCOOPY eSP (ACF110) CBS ISS (CBT) 2017(H)	2016(J)	No. Seri	Kode Parts Catalog
1	12200-K81-N00	HEAD COMP., CYLINDER	1	1		
2	12204-K46-305	GUIDE, VALVE(O.S.)	2	2		
	12204-KVY-305		2	2		
3	12206-KPL-900	CLIP, VALVE GUIDE	2	2		
4	12251-GGC-901	GASKET, CYLINDER HEAD (STD./0.25/0.50)	1	1		
	12252-K25-600	GASKET, CYLINDER HEAD (O.S. 0.75/1.00)	(1)	(1)		
5	31919-K25-601	PLUG, SPARK(MR9C-9N)(NG)	1	1		
	31919-K25-602	PLUG, SPARK(U27EPR-N9)(DS)	1	1		
6	36532-K81-N01	SENSOR, OXYGEN	1	1		
7	37750-K16-A21	SENSOR ASSY., THERMOSTAT OIL (MI)	1	1		
	37750-KPH-701	SENSOR ASSY., THERMOSTAT OIL (PS)	1	1		
8	90014-GGC-900	BOLT-WASHER, 6X13	1	1		
9	90201-GCC-000	NUT, HEX., 7MM	4	4		
10	90401-GFM-900	WASHER, 7.2X16X2.5	4	4		
	90402-KWW-740		4	4		
11	90443-MB0-000	WASHER, SEALING, 10.2MM	1	1		
12	90701-KFM-900	DOWEL PIN, SPECIAL, 8X14	2	2		
13	92900-06012-0B	BOLT, STUD, 6X12	2	2		
14	92900-06040-0B	BOLT, STUD, 6X40	2	2		
15	95701-06095-00	BOLT, FLANGE, 6X95	2	2		

E-4 CAMSHAFT/VALVE

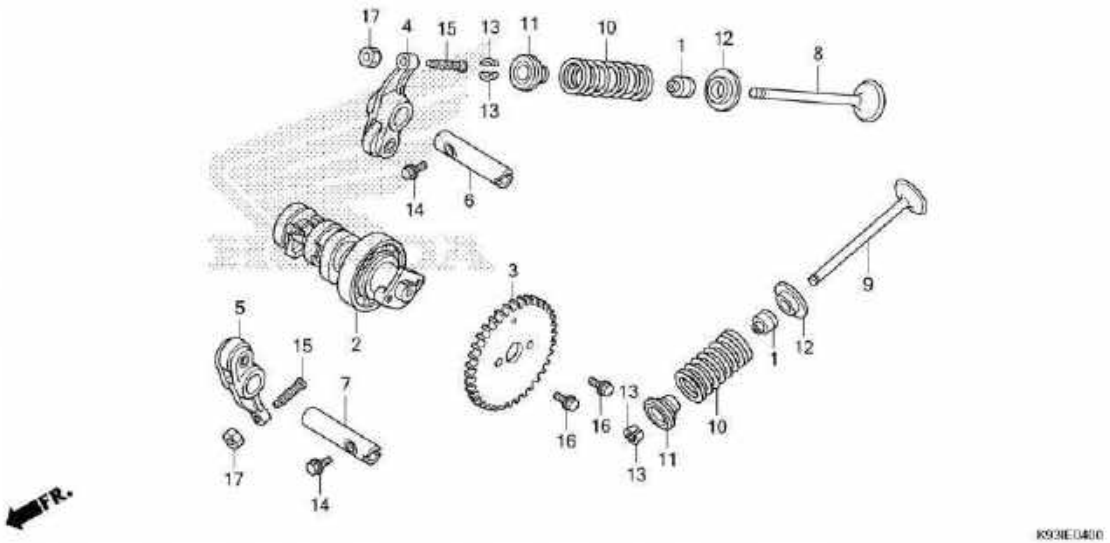

No. Ref.	L.O.N.	(Nomor ref. relatif) Deskripsi	F.R.T.
2	111118	CAMSHAFT	1,6
		.TERMASUK: Penyetelan klep	
3	1111Q4	SPROCKET, CAM	0,7
4		(6)	
	1111K8	ARM, INTAKE VALVE ROCKER(SATU) ..	2,5
		.TERMASUK: Penyetelan klep	
5		(7)	
	1111K9	ARM, EXHAUST VALVE ROCKER(SATU) .	2,5
		.TERMASUK: Penyetelan klep	
	1111L8	ARM, VALVE ROCKER	
		:UNTUK 1 KENDARAAN	2,5
		.TERMASUK: Penyetelan klep	
8	1111N0	VALVE, INTAKE(SATU)	2,8
		.TERMASUK: Skir klep	
9	1111N1	VALVE, EXHAUST(SATU)	2,8
		.TERMASUK: Skir klep	
	1111P0	VALVE :UNTUK 1 KENDARAAN	3,0
		.TERMASUK: Skir klep	
10		(1,11,12,13)	
	1111P2	INTAKE VALVE SPRING DAN/ATAU	
		STEM SEAL(SATU)	2,6
	1111P3	EXHAUST VALVE SPRING DAN/ATAU	
		STEM SEAL(SATU)	2,6
	1111Q2	VALVE SPRING DAN/ATAU STEM SEAL	
		:UNTUK 1 KENDARAAN	2,7

No. Ref.	No. Part	Deskripsi	Jumlah SCOOPY eSP(ACF110) CBS ISS (CBT) 2017(H)	2018(J)	No. Seri	Kode Parts Catalog
1	12209-GB4-681	SEAL, VALVE STEM(NO)	2	2		
	12209-GB4-682	SEAL, VALVE STEM(AR)	2	2		
2	14100-K50-T00	CAMSHAFT COMP.	1	1		
3	14321-KZL-E00	SPROCKET, CAM(34T)	1	1		
4	14430-K93-N00	ARM COMP., IN. VALVE ROCKER	1	1		
5	14440-K93-N00	ARM COMP., EX. VALVE ROCKER	1	1		
6	14451-KYY-900	SHAFT, IN. ROCKER ARM	1	1		
7	14452-KYY-900	SHAFT, EX. ROCKER ARM	1	1		
8	14711-K81-N00	VALVE, IN.	1	1		
9	14721-K81-N00	VALVE, EX.	1	1		
10	14751-KWP-900	SPRING, VALVE	2	2		
11	14771-K93-N00	RETAINER, VALVE SPRING	2	2		
12	14775-KVY-900	SEAT, VALVE SPRING	2	2		
13	14781-MA6-000	COTTER, VALVE	4	4		
14	90002-KWB-600	BOLT, FLANGE, 5X12	2	2		
15	90012-KWW-740	SCREW, TAPPET ADJUSTING	2	2		
16	90083-GB6-911	BOLT, KNOCK, 5MM	2	2		
17	90206-001-000	NUT, TAPPET ADJUSTING	2	2		

E-5 CAM CHAIN/TENSIONER

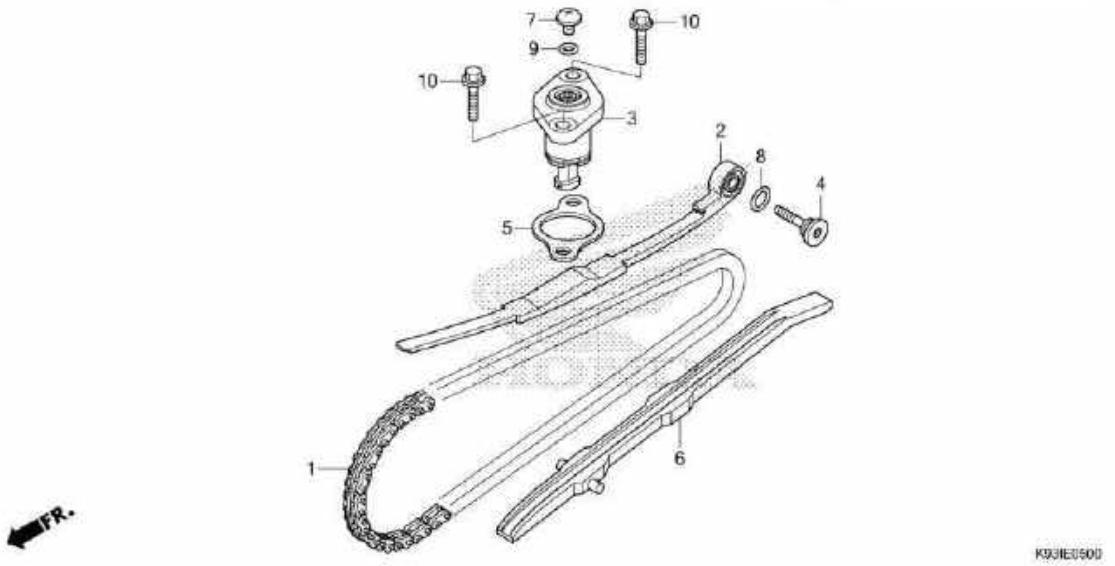

No. Ref.	L.O.N.	(Nomor ref. relatif) Deskripsi	F.R.T.
1	110140	CHAIN, CAM	3,9
		.TERMASUK: Penurunan dan pemasangan mesin	
2	111130	TENSIONER, CAM CHAIN	1,0
3		(5)	
	111133	LIFTER, TENSIONER	1,1
6	111139	GUIDE, CAM CHAIN	2,3

No. Ref.	No. Part	Deskripsi	Jumlah SCOOPY eSP (ACF110) CBS ISS (CBT) 2017(H)	2018(J)	No. Seri	Kode Parts Catalog
1	14401-K46-N21	CHAIN, CAM(90L)(BO)	1	1		
	14401-KVB-901	CHAIN, CAM(90L)(DA)	1	1		
2	14510-KVB-900	TENSIONER, CAM CHAIN	1	1		
3	14520-GFC-771	LIFTER ASSY., TENSIONER	1	1		
	14520-K25-901	LIFTER ASSY., TENSIONER(NI)	1	1		
	14520-K46-N21	LIFTER ASSY., TENSIONER(AD)	1	1		
4	14531-KVY-900	PIVOT, CAM CHAIN TENSIONER	1	1		
5	14560-KCW-851	GASKET, TENSIONER LIFTER	1	1		
6	14611-K44-V00	GUIDE, CAM CHAIN	1	1		
7	90005-KY7-000	SCREW, PAN, 6X6	1	1		
8	91301-GR0-004	O-RING, 15.2X1.5	1	1		
9	91306-MG3-000	O-RING, 1.5X9.5	1	1		
10	95701-06022-00	BOLT, FLANGE, 6X22	2	2		

E-6 CYLINDER

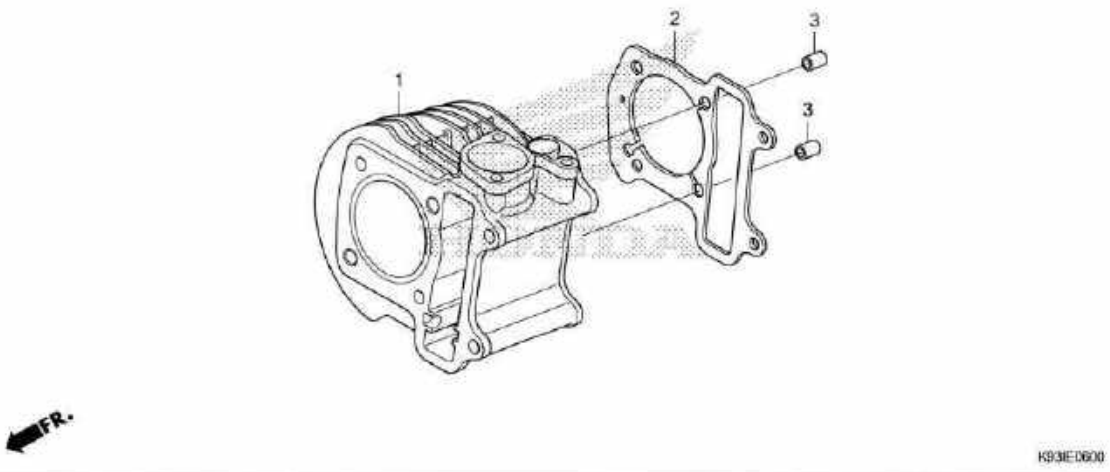

No. Ref.	L.O.N.	(Nomor ref. relatif) Deskripsi	F.R.T.
1	1111A5	CYLINDER	2,7
2	111102	GASKET, CYLINDER	2,6

No. Ref.	No. Part	Deskripsi	Jumlah SCOOPY eSP (ACF110) CBS ISS (CBT) 2017(H)	2018(J)	No. Seri	Kode Parts Catalog
1	12100-K25-600	CYLINDER COMP.	1	1		
2	12191-K44-V00	GASKET, CYLINDER	1	1		
3	90701-KFM-900	DOWEL PIN, SPECIAL, 8X14	2	2		

E-10 A.C.G. STARTER

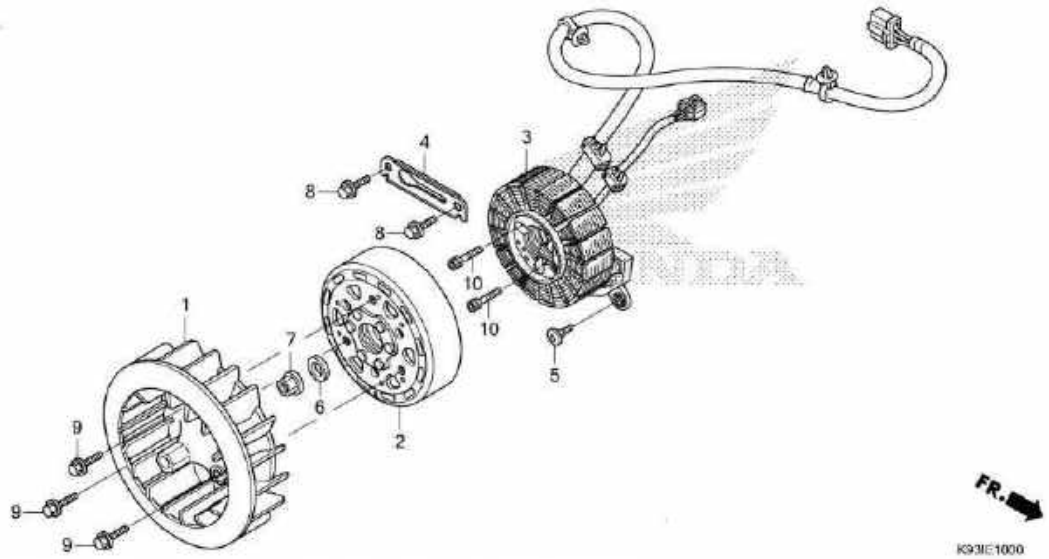

No. Ref.	L.O.N.	(Nomor ref. relatif) Deskripsi	F.R.T.
1	1151A6	FAN, COOLING	0,2
2	613105	ROTOR ATAU FLYWHEEL	0,4
3	6131A3	STATOR	1,0

No. Ref.	No. Part	Deskripsi	Jumlah SCOOPY eSP (ACF110) CBS ISS (CBT) 2017(H)	2018(J)	No. Seri	Kode Parts Catalog
1	19510-K44-V00	FAN COMP., COOLING	1	1		
2	31210-K46-N21	FLYWHEEL COMP.	1	-		
	31210-K61-601		-	1		
3	31220-K93-N01	STATOR COMP.	1	1		
4	32961-K44-V00	CLAMPER, A.C. GENERATOR CORD	1	1		
5	90001-KWR-000	BOLT, SOCKET, 6X18	1	1		
6	90439-KWZ-900	WASHER, 12X24X2.3	1	1		
7	94050-12000	NUT, FLANGE, 12MM	1	1		
8	95701-06014-00	BOLT, FLANGE, 6X14	2	2		
9	95701-06016-00	BOLT, FLANGE, 6X16	3	3		
10	96700-06020-00	BOLT, SOCKET, 6X20	3	3		

E-11 OIL PUMP

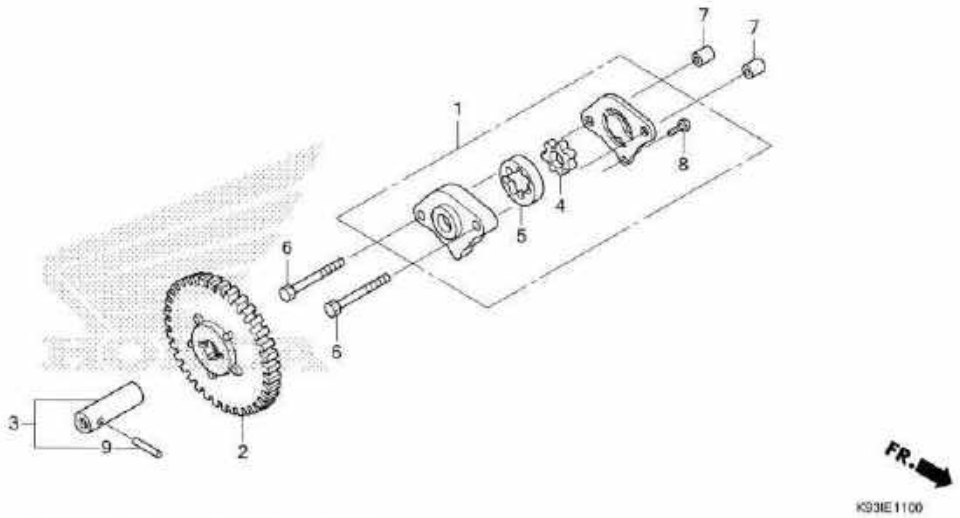

No. Ref.	L.O.N.	(Nomor ref. relatif) Deskripsi	F.R.T.
1		(4,5)	
	113105	PUMP ASSY., OIL	1,0
2	1131C4	GEAR, OIL PUMP DRIVEN	0,8

No. Ref.	No. Part	Deskripsi	Jumlah SCOOPY e6P (ACF110) CBS ISS (CBT) 2017ek - 2018ujl		No. Seri	Kode Parts Catalog
1	15100-KVB-900	PUMP ASSY., OIL	1	1		
2	15133-KVY-900	GEAR, OIL PUMP DRIVEN(39T)	1	1		
3	15135-KVY-900	SHAFT COMP., OIL PUMP	1	1		
4	15331-KVB-900	ROTOR, OIL PUMP INNER	1	1		
5	15332-KVB-900	ROTOR, OIL PUMP OUTER	1	1		
6	90002-GFC-900	BOLT, HEX., 6X30	2	2		
7	90702-KFM-900	DOWEL PIN, 8X12	2	2		
8	93901-34120	SCREW, TAPPING, 4X8	1	1		
9	96220-30168	ROLLER, 3X16.8	1	1		

E-13 LEFT SIDE COVER

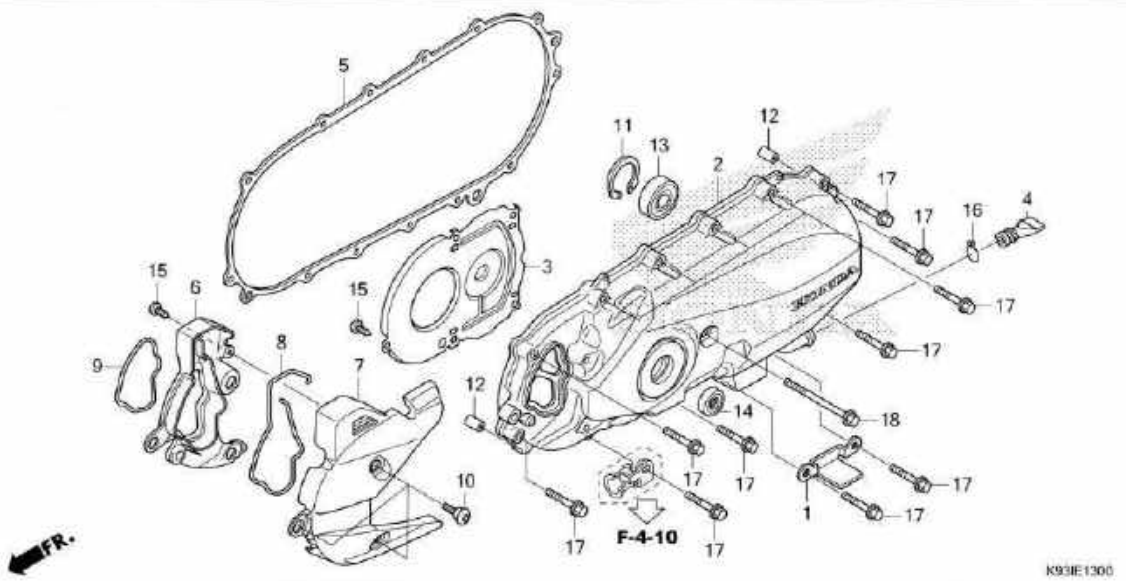

No. Ref.	L.O.N.	(Nomor ref. relatif) Deskripsi	F.R.T.
2	1101A6	COVER, CRANKCASE :LEFT	0,5
5	1101A3	GASKET, CRANKCASE COVER :LEFT	0,2
7		(6,8,9)	
	1101H4	DUCT, BELT COVER	0,1
13	2101F0	BEARING, DRIVESHAFT :LEFT	0,4
	2101J1	BEARING, DRIVESHAFT :KEDUA-DUANYA	1,2
14	112105	OIL SEAL, KICK STARTER SPINDLE	0,2

No. Ref.	No. Part	Deskripsi	Jumlah SCOOPY-eSP (ACF110) CBS ISS (CBT) 2017(H)	2018(J)	No. Seri	Kode Parts Catalog
1	11230-KVB-900	COVER, VENT HOLE	1	1		
2	11340-K25-600	COVER COMP., L. SIDE	1	1		
3	11342-KZL-930	PLATE, L. COVER	1	1		
4	11343-KVG-900	TUBE, DRAIN	1	1		
5	11395-K44-V00	GASKET, L. COVER	1	1		
6	19641-K44-V00	DUCT, L. COVER	1	1		
7	19642-K44-V00	CAP, L. COVER	1	1		
8	19748-K44-V00	SEAL, DUCT	1	1		
9	19749-KVY-900	SEAL, L. DUCT COVER	1	1		
10	90101-K29-900	BOLT, SOCKET, 6X18	3	3		
11	90601-KZL-930	CIRCLIP, INTERNAL, 32MM	1	1		
12	90702-KFM-900	DOWEL PIN, 8X12	2	2		
13	91005-KVB-900	BEARING COMP.(6002UU)(NT)	1	1		
	91005-KVB-N50	BEARING COMP.(6002UU)(SK)	1	1		
	91005-KVB-S50	BEARING COMP.(6002UU)(NS)	1	1		
14	91212-K44-V01	OIL SEAL, 16X26X6	1	1		
15	93903-34320	SCREW, TAPPING, 4X12	6	6		
16	95002-80000	CLIP, TUBE(C12)	1	1		
17	96001-06035-00	BOLT, FLANGE, 6X35	13	13		
18	96001-06085-00	BOLT, FLANGE, 6X85	1	1		

E-16 DRIVE FACE

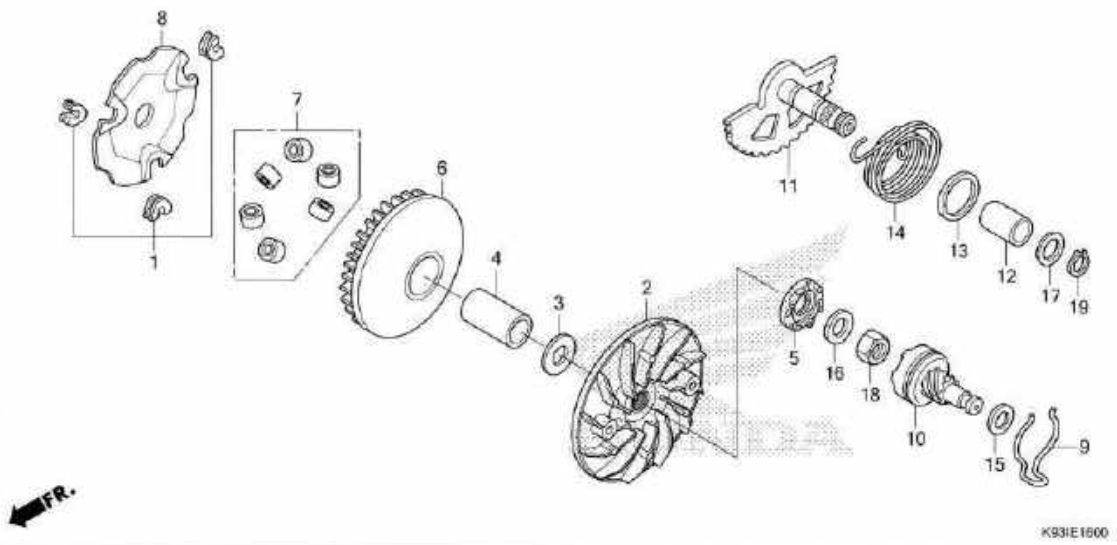

No. Ref.	L.O.N.	(Nomor ref. relatif) Deskripsi	F.R.T.
2		(5)	
	2111A0	FACE, DRIVE	0,4
6	2111A1	FACE, MOVABLE DRIVE	0,4
7		(1,8)	
	2111A4	ROLLER, WEIGHT	0,4
10		(9)	
	1121A9	GEAR, KICK STARTER DRIVEN	0,2
11	1121A2	SPINDLE, KICK STARTER	0,4
14	112103	SPRING, KICK STARTER RETURN	0,4

No. Ref.	No. Part	Deskripsi	Jumlah SCOOPY-i SP (ACF110) CBS ISS (CBT) 2017(-)	2018(-)	No. Seri	Kode Parts Catalog
1	22011-K81-N00	PIECE SET, SLIDE	1	1		
	22011-K93-N00		1	1		
2	22102-K44-V00	FACE, DRIVE	1	1		
3	22103-K44-V00	WASHER, 15X25X2	1	1		
4	22105-K44-V00	BOSS, DRIVE FACE	1	1		
5	22109-KZL-840	RATCHET, STARTER	1	1		
6	22110-K44-V00	FACE COMP., MOVABLE DRIVE	1	1		
7	22123-K44-V00	ROLLER SET, WEIGHT	1	1		
	22123-K81-N00		1	1		
8	22131-KVB-900	PLATE, RAMP	1	1		
9	28223-KZL-840	SPRING, KICK DRIVEN GEAR	1	1		
10	28230-KZL-840	GEAR COMP., KICK DRIVEN(7T)	1	1		
11	28250-KZR-600	SPINDLE COMP., KICK STARTER	1	1		
12	28253-KVB-900	BUSH, KICK SPINDLE	1	1		
13	28255-GS6-000	COLLAR, KICK BOSS	1	1		
14	28281-KZL-C00	SPRING, KICK RETURN	1	1		
15	90412-KZL-840	WASHER, THRUST, 10MM	1	1		
16	90426-KZL-840	WASHER, SPECIAL, 14MM	1	1		
17	90439-443-740	WASHER, 16X22	1	1		
18	94030-14200	NUT, HEX., 14MM	1	1		
19	94511-16000	CIRCLIP, EXTERNAL, 16MM	1	1		

E-17 DRIVEN FACE

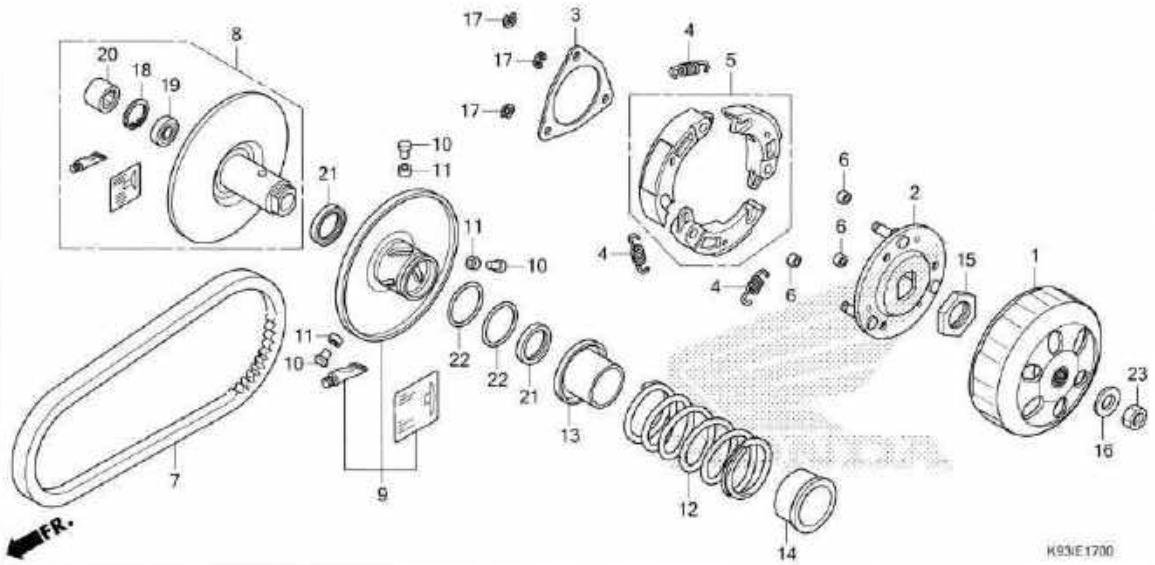

No. Ref.	L.O.N.	(Nomor ref. relatif) Deskripsi	F.R.T.
1	2121A0	OUTER, CLUTCH	0,3
5		(2,4)	
	2121A6	WEIGHT SET, CLUTCH	0,6
7	2111B2	BELT, DRIVE	0,4
8		(10,11,13)	
	2111A2	FACE, DRIVEN	0,5
9		(21,22)	
	2111A3	FACE, MOVABLE DRIVEN	0,5
12		(14)	
	2111A7	SPRING, DRIVEN FACE	0,5
20		(19)	
	2111A8	BEARING, DRIVEN FACE	0,6
	2111A8A	.Ganti 1 bearing tambahkan	0,1

No. Ref.	No. Part	Deskripsi	Jumlah SCOOPY e6P (ACF110) CBS ISS (CBT) 2017(H)	2018(J)	No. Seri	Kode Parts Catalog
1	22100-K81-N21	OUTER COMP., CLUTCH	1	1		
2	22350-K16-A41	PLATE COMP., DRIVE	1	1		
3	22361-K16-A41	PLATE, CLUTCH SIDE	1	1		
4	22401-GCC-000	SPRING, CLUTCH	3	3		
5	22535-K16-A40	WEIGHT SET, CLUTCH	1	1		
6	22804-148-000	RUBBER, CLUTCH DAMPER	3	3		
7	23100-K16-A41	BELT, DRIVE	1	1		
8	23205-K93-N00	FACE SET, DRIVEN	1	1		
9	23224-K81-N20	FACE SET, MOVABLE DRIVEN	1	1		
10	23225-KSY-900	PIN, ROLLER GUIDE	3	3		
11	23226-K27-V02	ROLLER, GUIDE	3	3		
12	23233-K16-A41	SPRING, DRIVEN FACE	1	1		
13	23237-K16-A41	COLLAR, SEAL	1	1		
14	23238-K16-A41	COLLAR, SPRING	1	1		
15	90202-KN7-670	NUT, SPECIAL, 28MM	1	1		
16	90441-GY6-940	WASHER, 12.2X29X2.5	1	1		
17	90454-K16-A41	CIRCLIP, 4MM	3	3		
18	90464-K27-V02	CIRCLIP, INTERNAL, 28MM	1	1		
19	91009-KVY-961	BEARING, RADIAL BALL, 6902U	1	1		
20	91109-KVY-902	BEARING, NEEDLE, 20X29X18	1	1		
21	91211-K44-V01	SEAL, DRIVEN FACE, 34X41X4	2	2		
22	91351-642-000	O-RING, PINION CAP	2	2		
23	94030-12200	NUT, HEX., 12MM	1	1		

E-17-10 TRANSMISSION

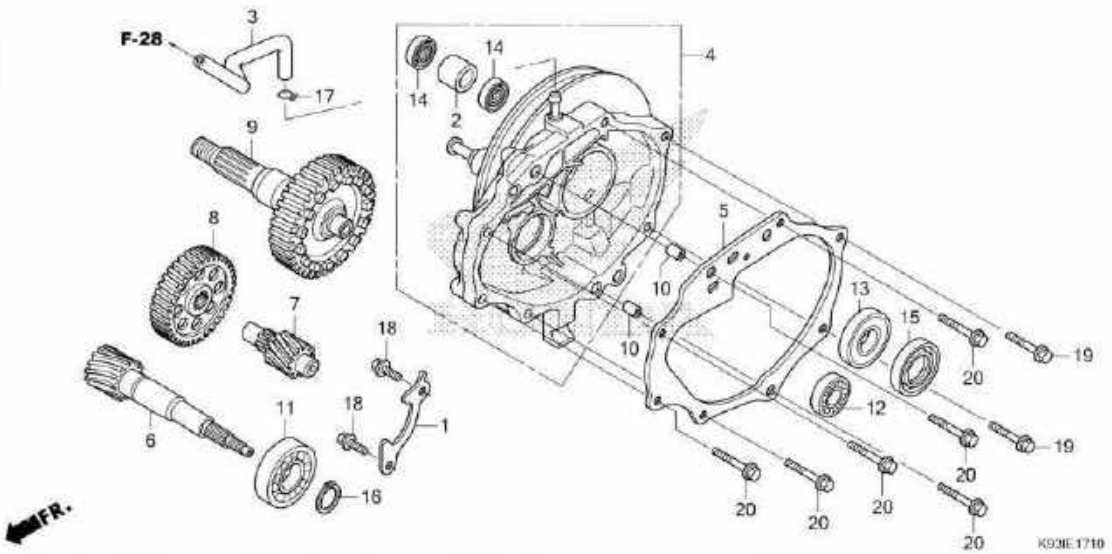

No. Ref.	L.O.N.	(Nomor ref. relatif) Deskripsi	F.R.T.
4	2101A2	CASE, TRANSMISSION	1,1
5	2101A3	GASKET, TRANSMISSION CASE	0,8
6	2101E9	SHAFT, DRIVE	1,1
7	210142	COUNTERSHAFT, TRANSMISSION	0,8
8	2101A5	GEAR, COUNTER	0,8
9	210170	SHAFT, FINAL GEAR	0,8
11	2101F1	BEARING, DRIVESHAFT :RIGHT	1,1
	2101J1	BEARING, DRIVESHAFT :KEDUA-DUANYA	1,2
12	2101C8	BEARING, COUNTERSHAFT :RIGHT	1,0
	2101C9	BEARING, COUNTERSHAFT :KEDUA-DUANYA	1,1
13		(15)	
	2101E6	BEARING, FINAL GEAR SHAFT :RIGHT	1,0
	2101J0	BEARING, FINAL GEAR SHAFT :KEDUA-DUANYA	1,1

No. Ref.	No. Part	Deskripsi	Jumlah SCOOPY eSP (ACF110) CBS ISS (CBT) 2017(6)	2018(J)	No. Seri	Kode Parts Catalog
1	11108-KZL-930	PLATE, MISSION BEARING SETTING	1	1		
2	11204-KGF-900	SLEEVE, RR. BRAKE CAM	1	1		
3	11211-K50-T00	TUBE, MISSION BREATHER	1	1		
4	21200-K50-T00	CASE COMP., TRANSMISSION ...	1	1		
5	21395-KVB-901	GASKET, MISSION CASE	1	1		
6	23411-K81-N00	SHAFT, DRIVE(18T)	1	1		
7	23421-K81-N00	COUNTERSHAFT(12T)	1	1		
8	23422-K46-N20	GEAR, COUNTER(51T)	1	1		
9	23430-K81-N00	GEAR COMP., FINAL(45T)	1	1		
10	90702-KFM-900	DOWEL PIN, 8X12	2	2		
11	91003-K50-T01	BEARING, RADIAL BALL, 6204 (SK)	1	1		
	91003-KZR-601	BEARING, RADIAL BALL, 6204 (NT)	1	1		
	91003-KZR-602	BEARING, RADIAL BALL, 6204 (FU)	1	1		
12	91006-K50-T01	BEARING, RADIAL BALL, 6201 (SK)	1	1		
	91006-KZR-601	BEARING, RADIAL BALL, 6201 (NT)	1	1		
	91006-KZR-602	BEARING, RADIAL BALL, 6201 (FU)	1	1		
13	91009-K16-A41	BEARING, RADIAL BALL, 60/22 UU (SK)	1	1		
	91009-K44-V01	BEARING, RADIAL BALL, 60/22 UU (JT)	1	1		

E-17-10 TRANSMISSION

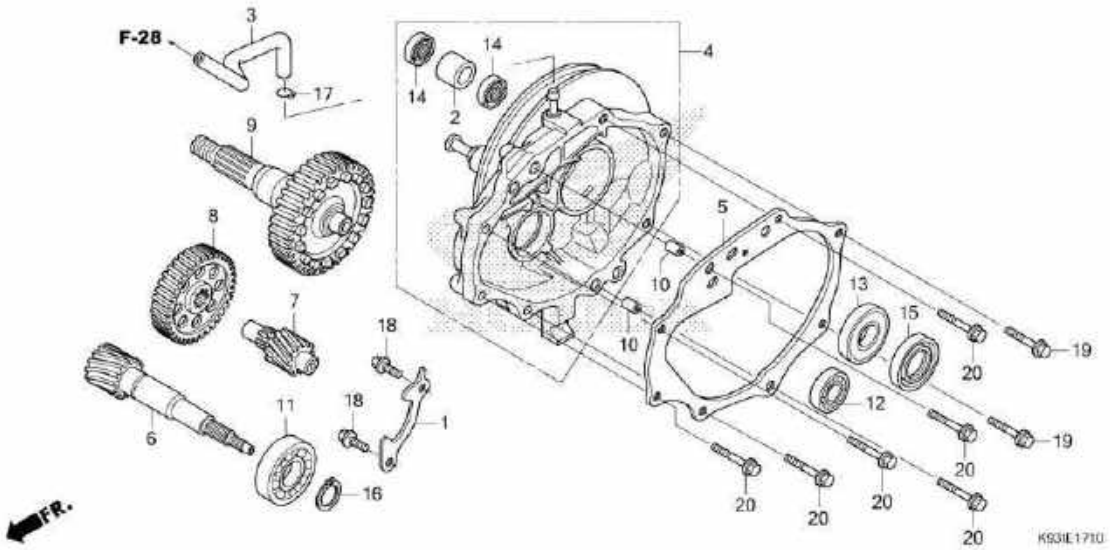

No. Ref.	No. Part	Deskripsi	Jumlah SCOOPY-i SP (ACF110) CBS ISS (CBT) 2017 (H)	2018 (J)	No. Seri	Kode Parts Catalog
13)	91009-K50-T01	BEARING, RADIAL BALL, 60/22 UU (FU)	1	1		
14	91201-434-003	OIL SEAL, 14X20X3.2	2	2		
15	91204-K44-V01	OIL SEAL, 29X44X7(AR)	1	1		
	91204-K50-T01	OIL SEAL, 29X44X7(NO)	1	1		
16	94510-20000	CIRCLIP, EXTERNAL, 20MM	1	1		
17	95002-50000	CLIP, TUBE(C9)	1	1		
18	95701-06014-00	BOLT, FLANGE, 6X14	2	2		
19	95701-06030-00	BOLT, FLANGE, 6X30	2	2		
20	95701-06040-00	BOLT, FLANGE, 6X40	6	6		

E-19-10 RIGHT CRANKCASE

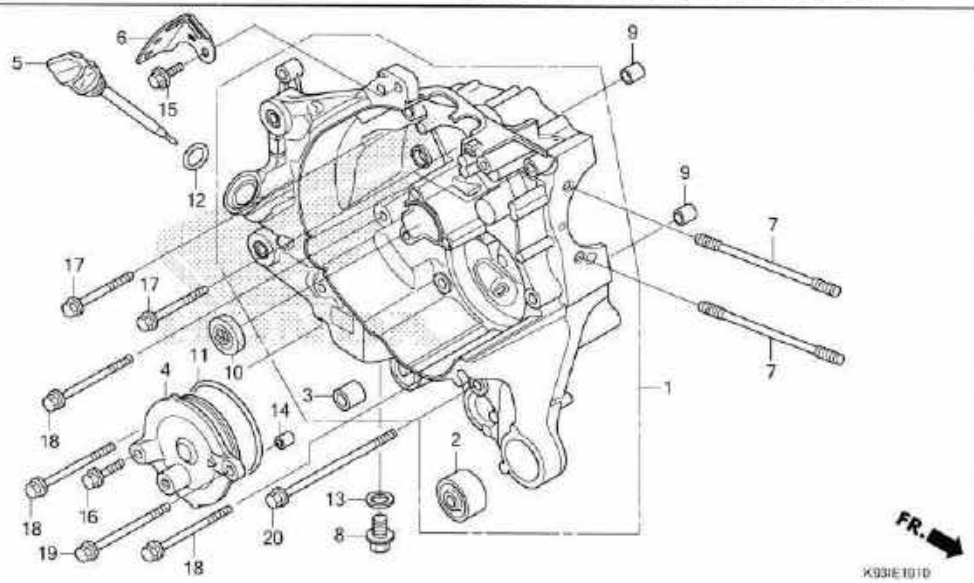

No. Ref.	L.O.N.	(Nomor ref. relatif) Deskripsi	F.R.T.
1	110120	CRANKCASE :RIGHT	3,8
		.TERMASUK: Penurunan dan pemasangan mesin	
	1101A2	CRANKCASE :KEDUA-DUANYA	4,9
		.TERMASUK: Penurunan dan pemasangan mesin	
10	110132	OIL SEAL, CRANKSHAFT :RIGHT	3,6
		.TERMASUK: Penurunan dan pemasangan mesin	
	1101H3	OIL SEAL, CRANKSHAFT :KEDUA-DUANYA	4,0
		.TERMASUK: Penurunan dan pemasangan mesin	

No. Ref.	No. Part	Deskripsi	Jumlah SCOOPY e&P(ACF110) CBS ISS (CBT) 2017(H)	2018(J)	No. Seri	Kode Parts Catalog
1	11100-K25-600	CRANKCASE COMP., R.	1	1		
2	11103-KVB-901	BUSH, ENGINE HANGER RUBBER (HO)	1	1		
	11103-KVB-930	BUSH, ENGINE HANGER RUBBER .	1	1		
	11216-GGC-900	.....	1	1		
3	11205-GBC-300	BUSH, MAIN STAND	1	1		
4	11361-K44-V00	COVER, OIL PUMP	1	1		
5	15651-KZL-930	GAUGE, OIL LEVEL	1	1		
6	32962-K81-N00	CLAMP, ENGINE HARNESS	1	1		
7	90031-K44-V00	BOLT A, STUD, 7X192.5	2	2		
8	90131-883-000	BOLT, DRAIN PLUG, 12X15	1	1		
9	90702-KZL-930	PIN, SPECIAL DOWEL, 6.3X10X12	2	2		
10	91201-K44-V01	OIL SEAL, 20.8X30.5X6	1	1		
11	91301-K44-V00	O-RING, 61X2	1	1		
12	91307-035-000	O-RING, 18X3	1	1		
13	94109-12000	WASHER, DRAIN PLUG, 12MM ...	1	1		
14	94301-08100	DOWEL PIN, 8X10	1	1		
15	95701-06014-00	BOLT, FLANGE, 6X14	1	1		
16	95701-06020-00	BOLT, FLANGE, 6X20	1	1		
17	95701-06055-00	BOLT, FLANGE, 6X55	3	3		
18	95701-06080-00	BOLT, FLANGE, 6X80	3	3		
19	95701-06090-00	BOLT, FLANGE, 6X90	1	1		
20	95701-06115-00	BOLT, FLANGE, 6X115	1	1		

E-19-20 LEFT CRANKCASE

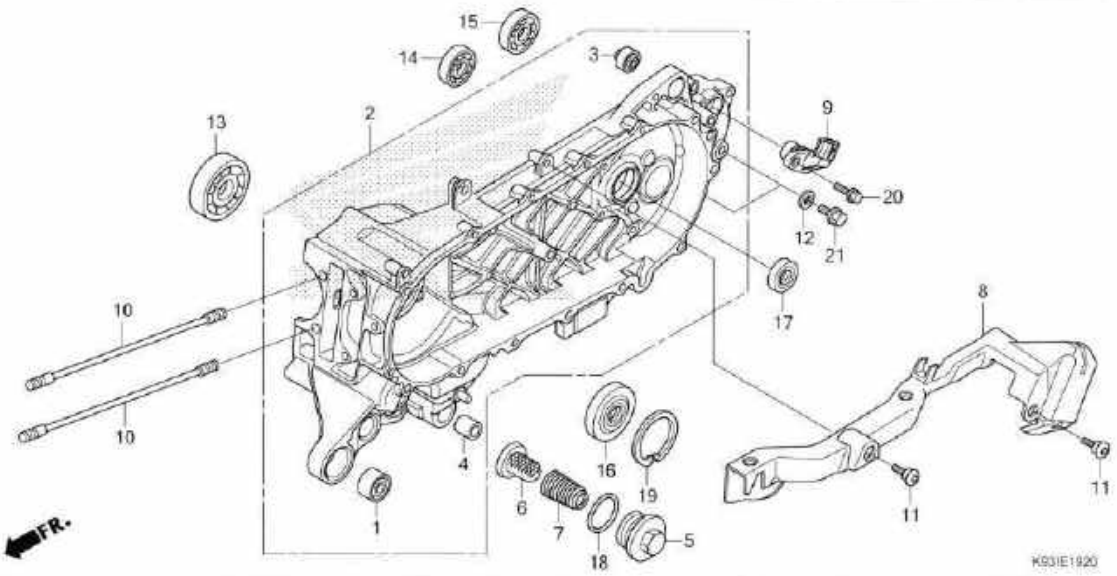

No. Ref.	L.O.N.	(Nomor ref. relatif) Deskripsi	F.R.T.
2	110115	CRANKCASE :LEFT	4,7
		.TERMASUK: Penurunan dan pemasangan mesin	
	1101A2	CRANKCASE :KEDUA-DUANYA	4,9
		.TERMASUK: Penurunan dan pemasangan mesin	
6		(5,7,18)	
	1131B5	SCREEN, OIL FILTER	0,2
9	617197	SENSOR, WHEEL SPEED :REAR	0,8
13	1101B6	BEARING, CRANKSHAFT :LEFT	3,9
		.TERMASUK: Penurunan dan pemasangan mesin	
14	2101C7	BEARING, COUNTERSHAFT :LEFT	1,0
	2101C9	BEARING, COUNTERSHAFT :KEDUA-DUANYA	1,1
15	2101E5	BEARING, FINAL GEAR SHAFT :LEFT	1,0
	2101J0	BEARING, FINAL GEAR SHAFT :KEDUA-DUANYA	1,1
16	110131	OIL SEAL, CRANKSHAFT :LEFT	3,9
		.TERMASUK: Penurunan dan pemasangan mesin	
	1101H3	OIL SEAL, CRANKSHAFT :KEDUA-DUANYA	4,0
		.TERMASUK: Penurunan dan pemasangan mesin	
17	2101E7	OIL SEAL, DRIVESHAFT	1,1

No. Ref.	No. Part	Deskripsi	Jumlah SCOOPY eSP (ACF110) CBS ISS (C5T) 2017(H)	Jumlah SCOOPY eSP (ACF110) CBS ISS (C5T) 2018(J)	No. Seri	Kode Parts Catalog
1	11103-KVB-901	BUSH, ENGINE HANGER RUBBER (HO)	1	1		
	11103-KVB-930	BUSH, ENGINE HANGER RUBBER	1	1		
	11216-GGC-900		1	1		
2	11200-K44-V00	CRANKCASE COMP., L.	1	1		
3	11203-K35-J00	BUSH, RR. CUSHION UNDER RUBBER	1	1		
	11203-KVB-901	BUSH, RR. CUSHION UNDER RUBBER (HO)	1	1		
4	11205-GBC-300	BUSH, MAIN STAND	1	1		
5	12361-035-000	CAP, TAPPET ADJUSTING HOLE	1	1		
6	15421-107-000	SCREEN, OIL FILTER	1	1		
	15421-KPL-900		1	1		
7	15426-KVB-900	SPRING, OIL FILTER SCREEN	1	1		
8	32112-K50-T00	PROTECTOR, SPEED SENSOR	1	1		
9	37700-K48-A01	SENSOR ASSY., SPEED	1	1		
10	90032-K44-V00	BOLT B, STUD, 7X197	2	2		
11	90101-K29-900	BOLT, SOCKET, 6X18	2	2		
12	90474-333-000	WASHER, SEALING, 8MM	2	2		
13	91002-K44-V01	BEARING, RADIAL BALL SPECIAL, 6007(FU)	1	1		
	91002-K46-N21	BEARING, RADIAL BALL SPECIAL, 6007(SK)	1	1		
	91002-K50-T01	BEARING, RADIAL BALL SPECIAL, 6007(NT)	1	1		
14	91005-K50-T01	BEARING, RADIAL BALL, 6301 (SK)	1	1		

E-19-20 LEFT CRANKCASE

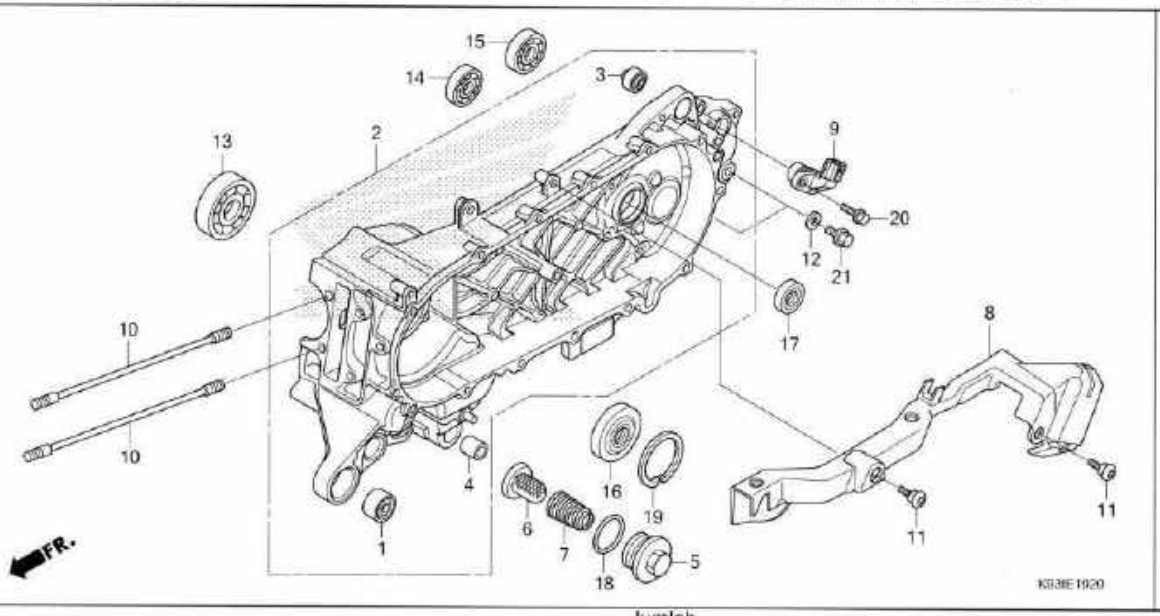

No. Ref.	No. Part	Deskripsi	Jumlah SCOOPY i SP (ACF110) CBS ISS (CBT) 2017(H) 2018(J)		No. Seri	Kode Parts Catalog
14)	91005-KZR-601	BEARING, RADIAL BALL, 6301 (NT)	1	1		
	91005-KZR-602	BEARING, RADIAL BALL, 6301 (FU)	1	1		
15	91008-K50-T01	BEARING, RADIAL BALL, 6302 (SK)	1	1		
	91008-KZR-601	BEARING, RADIAL BALL, 6302 (NT)	1	1		
	91008-KZR-602	BEARING, RADIAL BALL, 6302 (FU)	1	1		
16	91202-K50-T01	OIL SEAL, 20.8X52X6X7.5	1	1		
17	91203-K35-J01	OIL SEAL, 20X32X6	1	1		
18	91302-001-020	O-RING, 30.8MM	1	1		
19	94520-52150	CIRCLIP, INTERNAL, 52MM	1	1		
20	95701-06016-00	BOLT, FLANGE, 6X16	1	1		
21	95701-08012-00	BOLT, FLANGE, 8X12	2	2		

E-20 CRANKSHAFT/PISTON

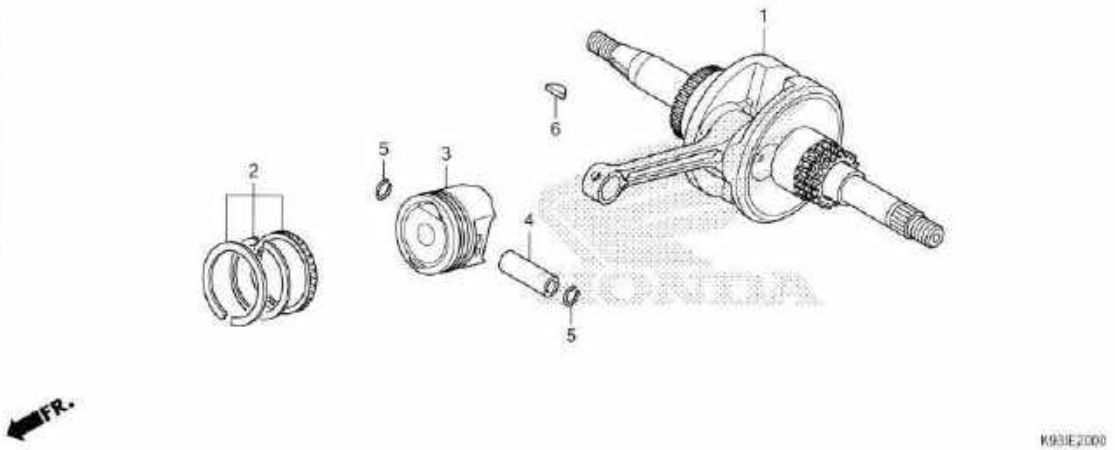

No. Ref.	L.O.N.	(Nomor ref. relatif) Deskripsi	F.R.T.
1	110185	CRANKSHAFT	4,1
		.TERMASUK: Penurunan dan pemasangan mesin	
3		(2,4,5)	
	111103	PISTON RING DAN/ATAU PISTON(SATU)	2,8

No. Ref.	No. Part	Deskripsi	Jumlah SCOOPY eSP (ACF110) CBS ISS (CBT) 2017(H)	2018(J)	No. Seri	Kode Parts Catalog
1	13000-K44-J00	CRANKSHAFT COMP.	1	1		
2	13011-K81-N00	RING SET, PISTON(STD.)(RK) .	1	1		
	13011-K93-N00	RING SET, PISTON(STD.)(TP) .	1	1		
	13021-K81-N00	RING SET, PISTON(0.25)(RK) .	(1)	(1)		
	13021-K93-N00	RING SET, PISTON(0.25)(TP) .	(1)	(1)		
	13031-K81-N00	RING SET, PISTON(0.50)(RK) .	(1)	(1)		
	13031-K93-N00	RING SET, PISTON(0.50)(TP) .	(1)	(1)		
	13041-K81-N00	RING SET, PISTON(0.75)(RK) .	(1)	(1)		
	13041-K93-N00	RING SET, PISTON(0.75)(TP) .	(1)	(1)		
	13051-K81-N00	RING SET, PISTON(1.00)(RK) .	(1)	(1)		
	13051-K93-N00	RING SET, PISTON(1.00)(TP) .	(1)	(1)		
3	13101-K81-P00	PISTON(STD.)	1	1		
	13102-K81-P00	PISTON(0.25)	(1)	(1)		
	13103-K81-P00	PISTON(0.50)	(1)	(1)		
	13104-K81-P00	PISTON(0.75)	(1)	(1)		
	13105-K81-P00	PISTON(1.00)	(1)	(1)		
4	13111-KWN-900	PIN, PISTON	1	1		
5	13115-GN5-910	CLIP, PISTON PIN, 13MM	2	2		
6	90741-003-010	KEY, WOODRUFF, 4MM	1	1		

E-22 THROTTLE BODY

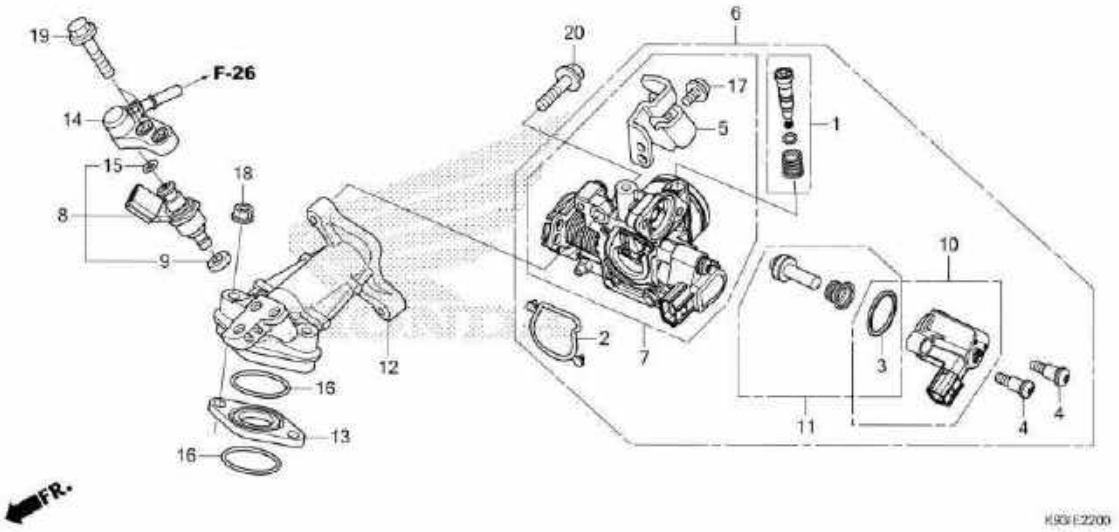

No. Ref.	L.O.N.	(Nomor ref. relatif) Deskripsi	F.R.T.
6		(2)	
	311132	BODY ASSY., THROTTLE	0,8
7	311130	BODY, THROTTLE	0,9
8		(9,14,15)	
	311145	INJECTOR, FUEL	0,8
10		(3,11)	
	311125	VALVE, STARTER	1,0
12		(13,16)	
	111107	MANIFOLD, INTAKE	0,8

No. Ref.	No. Part	Deskripsi	Jumlah SCOOPY eSP(ACF110) CBS ISS (CBT) 2017(n)	2018(u)	No. Seri	Kode Parts Catalog
1	16016-K03-H11	SCREW SET	1	1		
2	16075-K25-901	O-RING, THROTTLE BODY	1	1		
3	16077-KVB-S51	O-RING, 1.9X20.4	1	1		
4	16081-KYJ-901	SCREW, TORX, 5X8.7	2	2		
5	16169-K46-N21	STAY, WIRE	1	1		
6	16400-K81-N01	THROTTLE BODY ASSY.(GQRGB A)	1	1		
7	16410-K81-N01	BODY SET	1	1		
8	16450-K03-N31	INJECTOR ASSY., FUEL	1	1		
9	16472-KPC-D50	RING, SEAL	1	1		
10	16480-KVB-S51	SOLENOID	1	1		
11	16485-GGZ-J01	SEAT SET	1	1		
12	17111-K81-N00	PIPE, IN.	1	1		
13	17119-GGC-900	INSULATOR, IN. PIPE	1	1		
14	17560-K44-V00	JOINT COMP., INJECTOR	1	1		
15	91301-GGL-J01	O-RING, 6.3X2.2	1	1		
16	91308-GFM-900	O-RING, 25.5X1.9	2	2		
17	93892-05012-18	SCREW-WASHER, 5X12	1	1		
18	94050-06000	NUT, FLANGE, 6MM	2	2		
19	95701-06022-00	BOLT, FLANGE, 6X22	2	2		
20	96001-06020-00	BOLT, FLANGE, 6X20	2	2		

F-1 HEADLIGHT

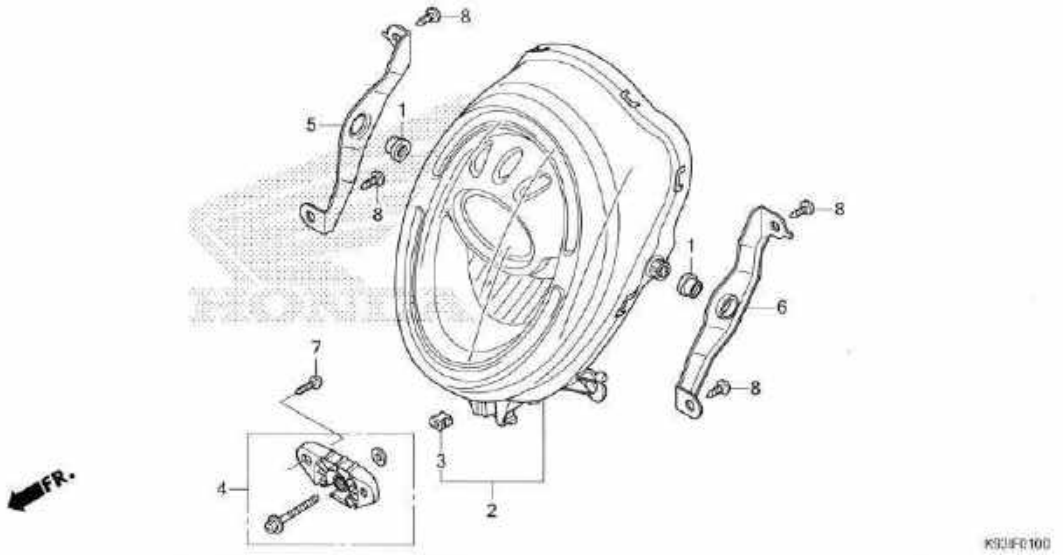

No. Ref.	L.O.N.	(Nomor ref. relatif) Deskripsi	F.R.T.
2	6161A7	HEADLIGHT UNIT.....	0,4

No. Ref.	No. Part	Deskripsi	Jumlah SCOOPY eSP (ACF110) CBS ISS (C6T) 2017ini	2018ini	No. Seri	Kode Parts Catalog
1	33101-K93-N00	RUBBER, HEADLIGHT	2	2		
2	33110-K93-N02	HEADLIGHT UNIT	1	1		
3	33114-KYT-900	NUT, SPECIAL	1	1		
4	33140-K93-N01	BRACKET, AIMING ADJUSTER	1	1		
5	61302-K93-N00	PLATE, R. HEADLIGHT UNIT	1	1		
6	61303-K93-N00	PLATE, L. HEADLIGHT UNIT	1	1		
7	93903-35210	SCREW, TAPPING, 5X12	2	2		
8	93903-35310	SCREW, TAPPING, 5X16	4	4		

3

F-2 METER

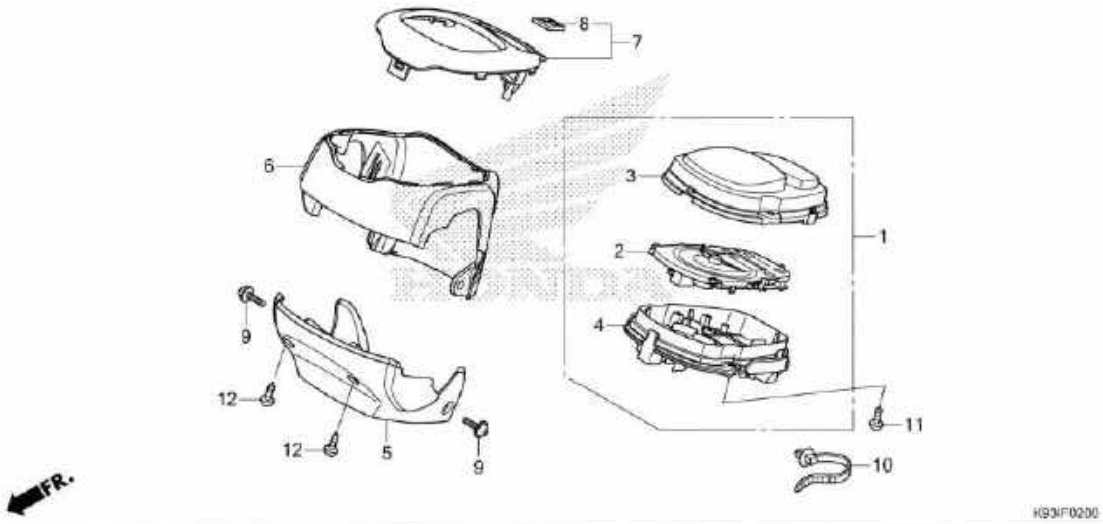

No. Ref.	L.O.N.	(Nomor ref. relatif) Deskripsi	F.R.T.
1	8121A1	METER ASSY., COMBINATION.....	0,4
2	8121H1	SPEEDOMETER.....	0,4
3	8121B7	LENS, METER.....	0,3
4	8121B3	CASE, METER.....	0,3
5	4131B5	COVER, HANDLE :FRONT.....	0,2
6	8121E6	COVER, SPEEDOMETER.....	0,3
7	8121G6	RING, METER.....	0,3

No. Ref.	No. Part	Deskripsi	Jumlah SCOOPY eSP (AOF110) CBS ISS (CBT) 2017(H)	2018(J)	No. Seri		Kode Parts Catalog
1	37100-K93-N01	METER ASSY., COMBINATION(KPH)	1	1			
2	37210-K93-N01	SPEEDOMETER COMP.(KPH)	1	1			
3	37211-K93-N01	LENS	1	1			
4	37212-K93-N01	CASE ASSY., UNDER	1	1			
5	53206-K93-N00ZH	COVER B, SPEEDOMETER					
		R258.....WINNING RED	1	1	--------	--------	2IN
	53206-K93-N00ZJ	*NH196*.....ROSS WHITE	1	1	--------	--------	2IN
	53206-K93-N00ZG	*YR342M*					
		MAT JASPER BROWN METALLIC	1	-	--------	--------	IN
	53206-K93-N00ZL	*NH1*.....BLACK	1	1	--------	--------	2IN,IN
	53206-K93-N00ZK	*NH177M*					
		VOSTOK SILVER METALLIC	1	-	--------	--------	3IN
	53206-K93-N00ZM	*GY140M*					
		BRIGHT LIME GREEN METALLIC	1	-	--------	--------	3IN
	53206-K93-N00ZN	*B216P* PEARL VIVACIOUS BLUE	1	-	--------	--------	3IN
6	53205-K93-N00ZL	COVER A, SPEEDOMETER(WL)					
		NH1.....BLACK	1	-	--------	--------	2IN
	53205-K93-N00ZJ	*NH196*.....ROSS WHITE	1	-	--------	--------	2IN,3IN
	53205-K93-N00ZA	*Y214P*...PEARL MILKY CREAM	1	-	--------	--------	3IN
	53205-K93-N00ZL	*NH1*.....BLACK	1	-	--------	--------	IN
	53205-K93-N00ZK	*NH177* VOSTOK SIVER METALLIC	1	-	--------	--------	IN
	53205-K93-N00ZL	*NH1*.....BLACK	-	1	--------	--------	2IN
	53205-K93-N00ZL	*NH1*.....BLACK	-	1	--------	--------	IN
	53205-K93-N00ZK	*NH177* VOSTOK SIVER METALLIC	-	1	--------	--------	IN
7	53207-K93-N00MJB	COVER COMP., SPEEDOMETER RING					
		YR342M					
		MAT JASPER BROWN METALLIC	1	1	--------	--------	IN
	53207-K93-N00RSW	*NH196*.....ROSS WHITE	1	-	--------	--------	2IN
	53207-K93-N00FMB	*NH1*.....BLACK	1	-	--------	--------	2IN,IN

F-2 METER

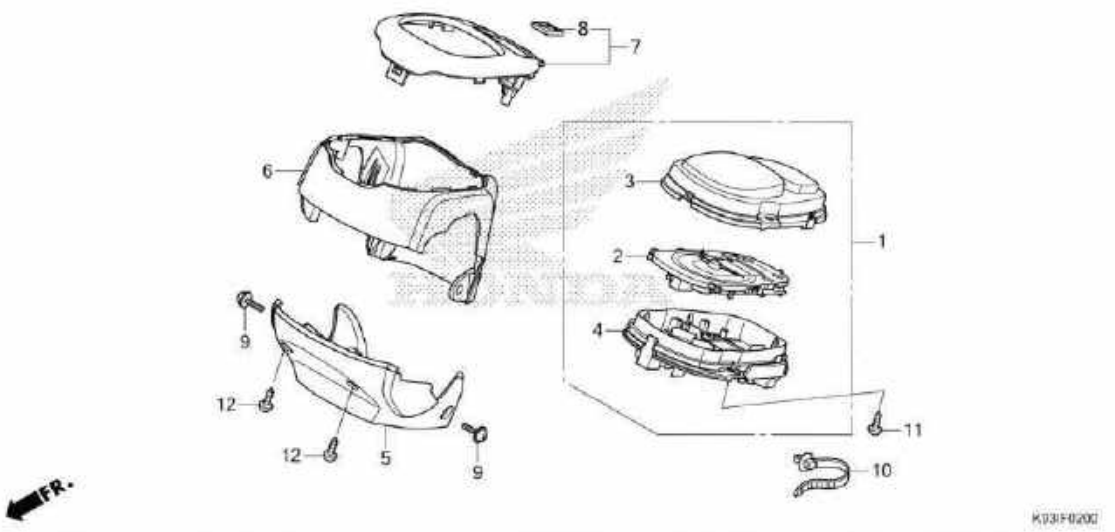

No. Ref.	No. Part	Deskripsi	Jumlah SCOOPY eSP (ACF110) CBS ISS (CBT) 2017(H) 2018(J)		No. Seri		Kode Parts Catalog
7)	53207-K93-N00VSM	COVER COMP., SPEEDOMETER RING *NH177M* VOSTOK SILVER METALLIC	1	-	--------	--------	3IN
	53207-K93-N00BLM	*GY140M* BRIGHT LIME GREEN METALLIC	1	-	--------	--------	3IN
	53207-K93-N00PVB	*B216P* PEARL VIVACIOUS BLUE	1	-	--------	--------	3IN
	53207-K93-N00FMB	*NH1*.....BLACK	-	1	--------	--------	2IN,IN
	53207-K93-N00MSR	*R378M* MAT SOLAR RED METALLIC	-	1	--------	--------	IN
	53207-K93-N00PFW	*NH341P*PEARL FADELESS WHITE	-	1	--------	--------	IN
8	86150-KPG-901	EMBLEM, PRODUCT(MR)	1	1			
	86150-KPG-902	EMBLEM, PRODUCT(UE)	1	1			
	86150-KTJ-C60	EMBLEM, PRODUCT(SH)	1	1			
9	90107-K93-N00	SCREW, PAN, 5X16	2	2			
10	91540-KPH-902	CLIP, HARNESS BAND	1	1			
11	93903-25310	SCREW, TAPPING, 5X16	3	3			
12	93903-34380	SCREW, TAPPING, 4X12	2	2			

3

F-4-10 HANDLE LEVER/SWITCH/CABLE

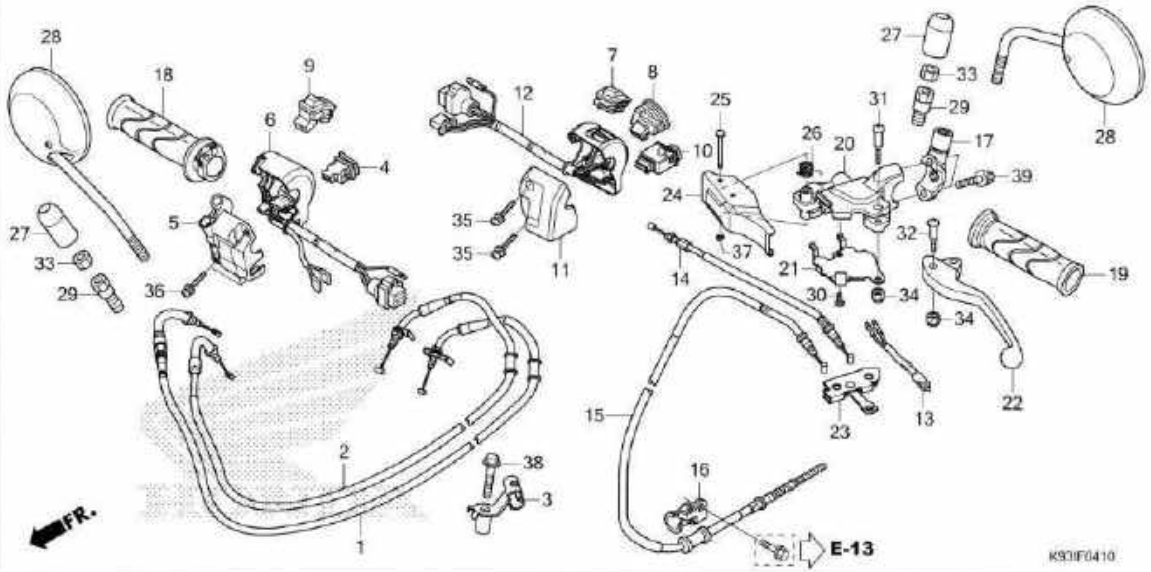

No. Ref.	L.O.N.	(Nomor ref. relatif) Deskripsi	F.R.T.
1		(2)	
	811100	CABLE, THROTTLE.....	1,1
		.CATATAN: Waktu sama untuk dua unit	
4	615116	SWITCH, STARTER.....	0,3
6	8101K8	HOUSING. STARTER SWITCH.....	1,1
7	615117	SWITCH, DIMMER.....	0,3
8	6151A3	SWITCH, HORN.....	0,3
9	6151C4	SWITCH, IDLE.....	0,3
10	61511B	SWITCH, WINKER.....	0,3
12	8101K9	HOUSING. WINKER SWITCH.....	0,6
13	6151B3	SWITCH, REAR STOP :LEVER SIDE..	0,8
	6151B6	SWITCH, STOP :KEDUA-DUANYA.....	1,0
14	8111B9	CABLE, FRONT BRAKE CONNECTING..	0,7
15	811130	CABLE, REAR BRAKE.....	1,1
18	810150	GRIP, THROTTLE.....	0,7
19	8101C0	GRIP, HANDLE :LEFT.....	0,1
20	8101C8	BRACKET, HANDLE LEVER :LEFT....	0,7
22	8101C6	LEVER, HANDLE :LEFT.....	0,2
	8101F5	LEVER, HANDLE :KEDUA-DUANYA....	0,3
23	8101D1	EQUALIZER, BRAKE CABLE.....	0,7
24	8101D2	LEVER, REAR BRAKE LOCK.....	0,2

No. Ref.	No. Part	Deskripsi	Jumlah SCOOPY eSP (ACF110) CBS ISS (CBT) 2017(H)	2018(J)	No. Seri	Kode Parts Catalog
1	17910-K81-N31	CABLE COMP. A, THROTTLE	1	1		
2	17920-K81-N31	CABLE COMP. B, THROTTLE	1	1		
3	17925-K50-T00	CLAMPER, THROTTLE CABLE	1	1		
4	35160-K20-T21	SWITCH UNIT, STARTER	1	1		
5	35164-K93-N01ZB	HOUSING, STARTER SWITCH RR. *NH1*.....BLACK	1	1		
6	35165-K93-N01ZA	HOUSING COMP., STARTER SWITCH *NH1*.....BLACK	1	1		
7	35170-K93-N01	SWITCH UNIT, DIMMER	1	1		
8	35180-K20-T21	SWITCH UNIT, HORN	1	1		
9	35190-KWN-901	SWITCH UNIT, IDLE	1	1		
10	35200-K03-N31	SWITCH UNIT, WINKER	1	1		
11	35202-K16-A41ZC	HOUSING, WINKER SWITCH RR. *NH1*.....BLACK	1	1		
12	35205-K93-N01ZA	HOUSING COMP., WINKER SWITCH *NH1*.....BLACK	1	1		
13	35340-KPH-901	SWITCH ASSY., FR. STOP	1	1		
14	43440-K93-N01	CABLE COMP., FR. BRAKE CONNECTING	1	1		
15	43450-K93-N01	CABLE COMP., RR. BRAKE	1	1		
16	43455-KZL-930	CLAMPER, RR. BRAKE CABLE	1	1		
17	45517-K81-N30	HOLDER, MIRROR	1	1		
18	53140-K44-V00	GRIP COMP., THROTTLE	1	1		
19	53166-KWB-600	GRIP, L. HANDLE	1	1		
20	53172-K81-N30	BRACKET, L. BRAKE LEVER	1	1		
21	53173-K81-N30	COVER, L. BRAKE LEVER BRACKET	1	1		

F-4-10 HANDLE LEVER/SWITCH/CABLE

No. Ref.	No. Part	Deskripsi	Jumlah SCOOPY eSP (NCF110) CBS ISS (CBT) 2017(A)	2018(L)	No. Seri		Kode Parts Catalog
22	53178-K81-N30	LEVER, L. STEERING HANDLE ...	1	1			
23	53184-K81-N30	EQUALIZER COMP.	1	1			
24	53185-K81-N30	LEVER COMP., BRAKE LOCK	1	1			
25	53186-K81-N30	PIN, BRAKE LOCK LEVER	1	1			
26	53188-K81-N30	SPRING, BRAKE LOCK ARM RETURN	1	1			
27	88119-KWW-640	CAP, LOCK NUT	2	2			
28	88211-K93-N00ZC	MIRROR COMP.					
		R258.....WINNING RED	2	2	--------	--------	2IN
	88211-K93-N00ZD	*NH196*.....ROSS WHITE	2	2	--------	--------	2IN,3IN
	88211-K93-N00ZB	*YR342M* MAT JASPER BROWN METALLIC	2	2	--------	--------	IN
	88211-K93-N00ZE	*NH1*.....BLACK	2	2	--------	--------	2IN,IN
	88211-K93-N00ZA	*Y214P*...PEARL MILKY CREAM	2	-	--------	--------	3IN
	88211-K93-N00ZF	*R378M* MAT SOLAR RED METALLIC	-	2	--------	--------	IN
	88211-K93-N00ZG	*NH341P* PEARL FADELESS WHITE	-	2	--------	--------	IN
29	90101-KWW-640	BOLT, ADAPTER, 10MM	2	2			
30	90104-K81-N30	SCREW, PAN, 5X8	1	1			
31	90115-K81-N30	SCREW, HANDLE LEVER PIVOT ...	1	1			
32	90116-K81-N30	SCREW, HANDLE LEVER PIVOT ...	1	1			
33	90301-KWW-640	NUT, HEX., 10MM (LEFT HAND THREAD)	2	2			
34	90302-KVB-T01	NUT, U, 5MM	2	2			
35	93892-05020-00	SCREW-WASHER, 5X20	2	2			
36	93892-05025-00	SCREW-WASHER, 5X25	3	3			
37	94540-03010	E-RING, 3MM	1	1			
38	95701-06030-00	BOLT, FLANGE, 6X30	1	1			
39	96001-06022-07	BOLT, FLANGE, 6X22	2	2			

3

F-5 FRONT BRAKE MASTER CYLINDER

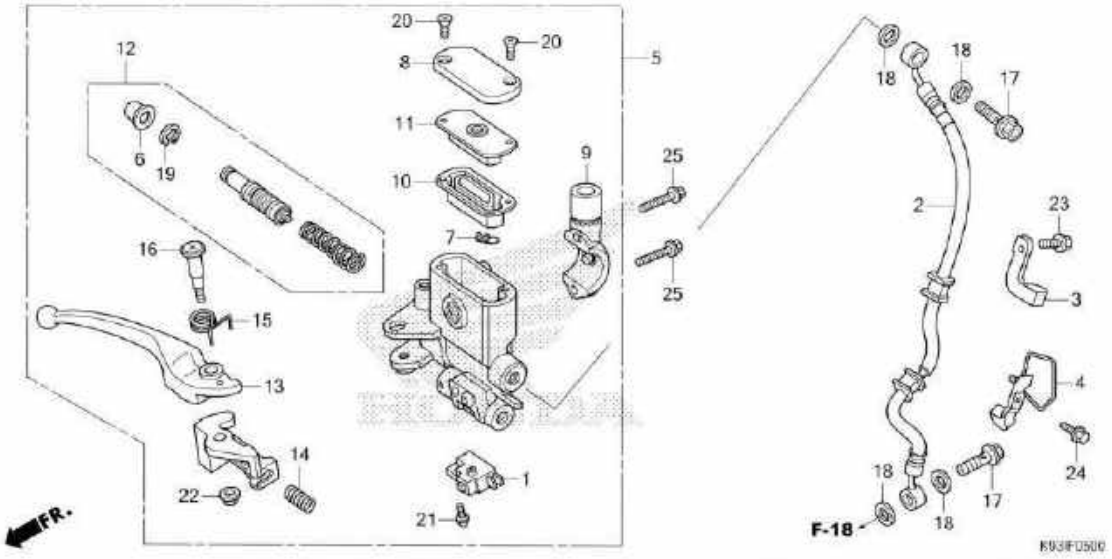

No. Ref.	L.O.N.	(Nomor ref. relatif) Deskripsi	F.R.T.
1	6151B2	SWITCH, FRONT STOP.....	0,2
	6151B6	SWITCH, STOP :KEDUA-DUANYA.....	1,0
2	7121A0	HOSE, FRONT BRAKE.....	0,5
		.TERMASUK: Pembuangan angin palsu	
5	712105	CYLINDER, FRONT BRAKE MASTER...	0,8
		.TERMASUK: Pembuangan angin palsu	
10	7121G6	DIAPHRAGM, FRONT BRAKE MASTER CYLINDER.....	0,1
12	7121G9	PISTON SET, FRONT BRAKE MASTER .	0,7
		.TERMASUK: Pembuangan angin palsu	
13	8101C7	LEVER, HANDLE :RIGHT.....	0,1
	8101F5	LEVER, HANDLE :KEDUA-DUANYA....	0,3

No. Ref.	No. Part	Deskripsi	Jumlah SCOOPY eSP (ACF110) CBS ISS (CBT) 2017(H)	2018(J)	No. Seri	Kode Parts Catalog
1	35340-KWB-601	SWITCH ASSY., FR. STOP	1	1		
2	45126-K93-N01	HOSE COMP., FR. BRAKE	1	1		
3	45156-K50-T00	CLAMPER A, BRAKE HOSE	1	1		
4	45157-KVB-T00	CLAMPER B, BRAKE HOSE	1	1		
5	45500-K81-N31	CYLINDER ASSY., FR. BRAKE MASTER	1	1		
6	45504-410-003	BOOT COMP.	1	1		
7	45512-MA6-006	PROTECTOR	1	1		
8	45513-GW0-911	CAP, MASTER CYLINDER	1	1		
9	45517-K81-N30	HOLDER, MIRROR	1	1		
10	45520-GW0-911	DIAPHRAGM	1	1		
11	45521-GW0-911	PLATE, DIAPHRAGM	1	1		
12	45530-K03-M61	CYLINDER SET, MASTER	1	1		
13	53175-K81-N31	LEVER, R. STEERING HANDLE ...	1	1		
14	53198-GBL-870	SPRING, RETURN	1	1		
15	53199-KVG-910	SPRING, BRAKE LEVER RETURN ..	1	1		
16	90114-K44-V01	BOLT, HANDLE LEVER	1	1		
17	90145-KPH-B30	BOLT, OIL, 10X22	2	2		
18	90545-300-000	WASHER, OIL BOLT	4	4		
19	90651-K03-M61	CIRCLIP, INTERNAL, 18.8	1	1		
20	93600-04012-1G	SCREW, FLAT, 4X12	2	2		
21	93893-04012-17	SCREW-WASHER, 4X12	1	1		
22	94050-06000	NUT, FLANGE, 6MM	1	1		
23	95701-06012-00	BOLT, FLANGE, 6X12	1	1		
24	95701-06014-00	BOLT, FLANGE, 6X14	1	1		
25	96001-06022-07	BOLT, FLANGE, 6X22	2	2		

F-9 HANDLE PIPE

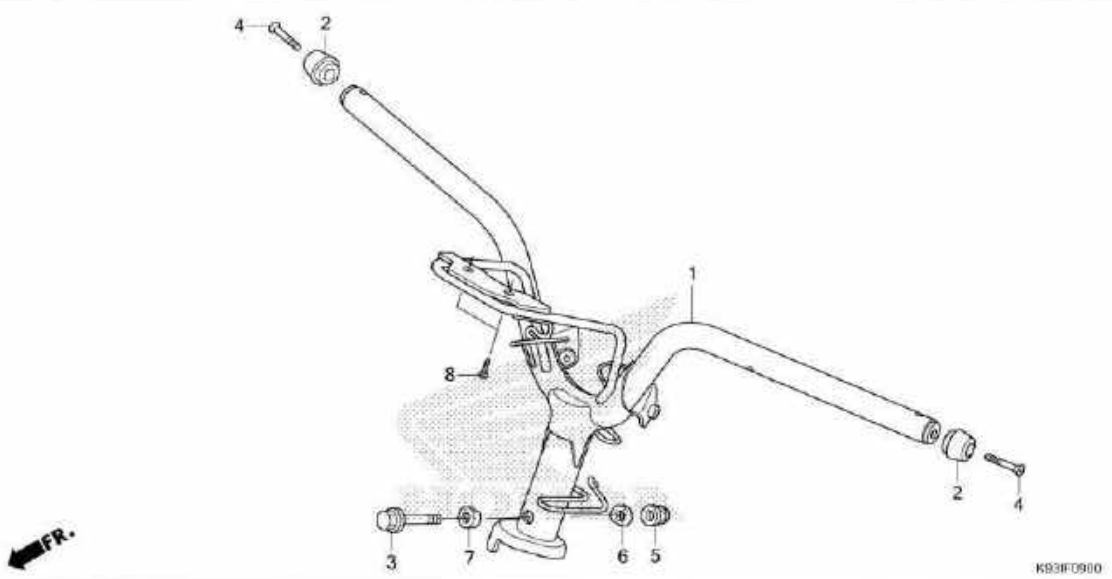

No. Ref.	L.O.N.	(Nomor ref. relatif) Deskripsi	F.R.T.
1	810100	PIPE, STEERING HANDLE.....	1,0

No. Ref.	No. Part	Deskripsi	Jumlah SCOOPY eSP (4CF110) CBS ISS (CBT) 2017(+)	2018(-)	No. Seri	Kode Parts Catalog
1	53100-K93-N00	PIPE COMP., STEERING HANDLE .	1	1		
2	53102-KVB-S00	WEIGHT A, HANDLE	2	2		
3	90106-GN5-900	BOLT, FLANGE, 10X50	1	1		
4	90191-K47-N41	SCREW, OVAL, 6X45	2	2		
5	90304-KGH-901	NUT, U, 10MM	1	1		
6	90501-KPH-880	COLLAR A, HANDLE SETTING	1	1		
7	90505-KPH-880	COLLAR B, HANDLE SETTING	1	1		
8	93903-35310	SCREW, TAPPING, 5X16	2	2		

F-10 STEERING STEM

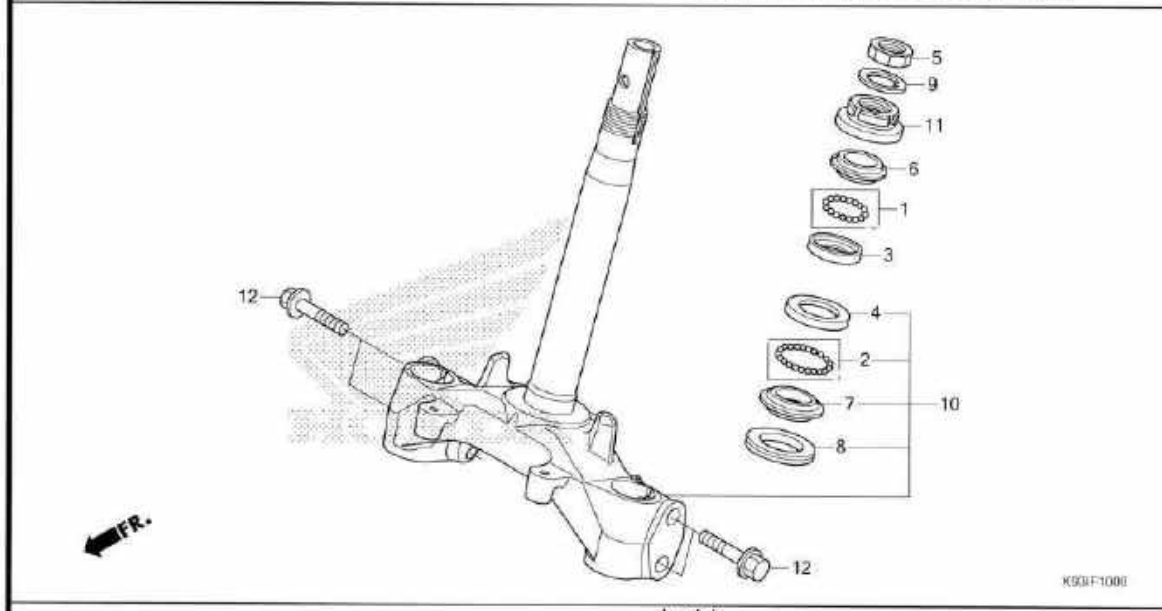

No. Ref.	L.O.N.	(Nomor ref. relatif) Deskripsi	F.R.T.
3		(1)	
	5101A0	RACE, STEERING BALL :UPPER.....	1,7
4	5101A1	RACE, STEERING BALL :LOWER.....	1,9
	5101C9	RACE, STEERING BALL :KEDUA-DUANYA	1,9
6	5101A9	RACE, STEERING TOP CONE.....	1,7
7		(2,8)	
	5101B0	RACE, STEERING BOTTOM CONE.....	1,9
10	51010D	STEM OR SHAFT ASSY., STEERING..	1,7
11	5101B2	THREAD, STEERING HEAD TOP.....	1,5

No. Ref.	No. Part	Deskripsi	Jumlah SCOOPY i6P (NCF110) CBS 108 (CBT) 2017 (4)	Jumlah SCOOPY i6P (NCF110) CBS 108 (CBT) 2018 (U)	No. Seri	Kode Parts Catalog
1	06530-GBG-B20	BALL SET, STEEL, #6X23	1	1		
2	06531-GBG-B20	BALL SET, STEEL, #6X29	1	1		
3	50301-GN5-901	RACE, STEERING TOP BALL	1	1		
4	50302-GN5-900	RACE, STEERING BOTTOM BALL ..	1	1		
5	50306-GN5-900	NUT, STEERING STEM LOCK	1	1		
6	53211-GN5-900	RACE, STEERING TOP CONE	1	1		
7	53212-GN5-900	RACE, STEERING BOTTOM CONE ..	1	1		
8	53214-GN5-900	DUST SEAL, STEERING HEAD	1	1		
9	53216-GN5-830	WASHER, STEERING STEM NUT ...	1	1		
10	53219-K93-N00	STEM SUB ASSY., STEERING	1	1		
11	53220-GN5-900	THREAD COMP., STEERING HEAD TOP	1	1		
12	95801-10045-08	BOLT, FLANGE, 10X45	4	4		

F-11 FRONT FENDER

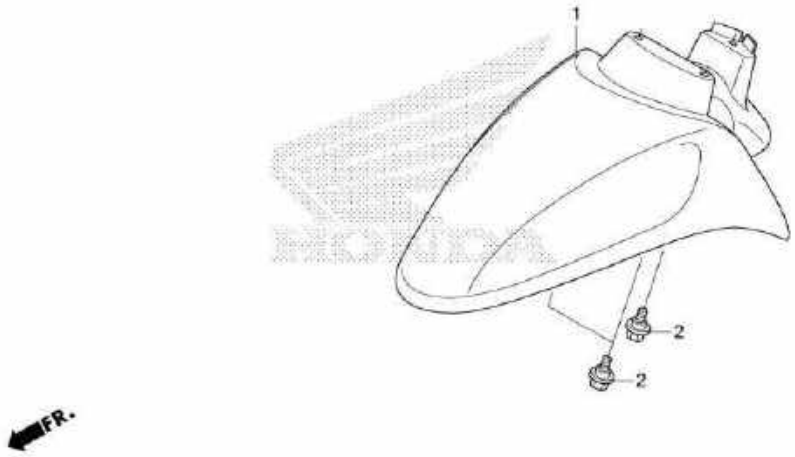

No. Ref.	L.O.N.	(Nomor ref. relatif) Deskripsi	F.R.T.
1	4131B7	FENDER, FRONT.....	0,2

No. Ref.	No. Part	Deskripsi	Jumlah SCOOPY e(SP/ACF110) CBS ISS (CBT) 2017(H)	2018(J)	No. Seri		Kode Parts Catalog
1	61100-K93-N00ZL	FENDER, FR.					
		R258.....WINNING RED	1	1	--------	--------	2IN
	61100-K93-N00ZM	*NH196*.....ROSS WHITE	1	1	--------	--------	2IN,3IN
	61100-K93-N00ZK	*YR342M* MAT JASPER BROWN METALLIC	1	1	--------	--------	IN
	61100-K93-N00ZN	*NH1*.....BLACK	1	-	--------	--------	2IN,IN
	61100-K93-N00ZA	*Y214P*...PEARL MILKY CREAM	1	-	--------	--------	3IN
	61100-K93-N00ZN	*NH1*.....BLACK	-	1	--------	--------	2IN,IN
	61100-K93-N00ZP	*R378M* MAT SOLAR RED METALLIC	-	1	--------	--------	IN
	61100-K93-N00ZQ	*NH341P* PEARL FADELESS WHITE	-	1	--------	--------	IN
2	90116-KVB-900	BOLT, FLANGE, 6MM.....	3	3			

3

F-12 FRONT COVER/INNER COVER

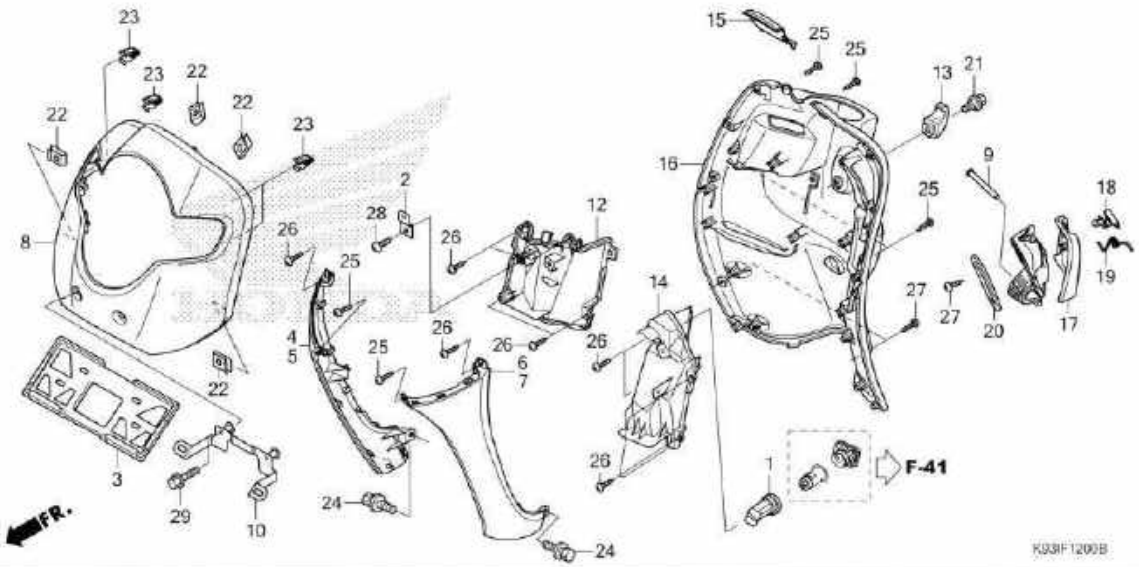

No. Ref.	L.O.N.	(Nomor ref. relatif) Deskripsi	F.R.T.
4		(5)	
	4131M2	COVER, FRONT SIDE :RIGHT.....	0,2
7		(6)	
	4131M3	COVER, FRONT SIDE :LEFT.....	0,2
	4131V6	COVER, FRONT SIDE :KEDUA-DUANYA	0,3
8	4111E3	COVER, FRONT.....	0,3
12	4111CH	POCKET, INNER :RIGHT.....	0,4
14	4111CJ	POCKET, INNER :LEFT.....	0,5
16	411150	PANEL, INNER.....	0,5
17	4111F2	COVER, POCKET :LEFT.....	0,4
18	4111CL	KNOB, POCKET LID.....	0,5

No. Ref.	No. Part	Deskripsi	Jumlah SCOOPY eSP (KCF110) CBS ISS (CBT) 2017 (H)	2018 (J)	No. Seri		Kode Parts Catalog
1	32107-K41-N00	COVER, ACCESSORY SOCKET	1	1			
2	60180-K16-A20	STAY, RECEIVER	1	1			
3	61316-KCJ-661	GUARD, NUMBER PLATE	1	1			
4	64201-K93-N00ZH	COVER, R. FR.(WL)					
		NH196.....ROSS WHITE	1	-	--------	--------	2IN
	64201-K93-N00ZG	*R258*.....WINNING RED	1	-	--------	--------	2IN
	64201-K93-N00ZK	*NH1*.....BLACK	1	-	--------	--------	2IN
	64201-K93-N00ZG	*R258*.....WINNING RED	-	1	--------	--------	2IN
	64201-K93-N00ZK	*NH1*.....BLACK	-	1	--------	--------	2IN,IN
	64201-K93-N00ZH	*NH196*.....ROSS WHITE	-	1	--------	--------	2IN
	64201-K93-N00ZQ	*NH341P* PEARL FADELESS WHITE	-	1	--------	--------	IN
	64201-K93-N00ZP	*R378M* MAT SOLAR RED METALLIC	-	1	--------	--------	IN
	64201-K93-N00ZN	*YR342M* MAT JASPER BROWN METALLIC	-	1	--------	--------	IN
5	64201-K93-N00ZL	COVER, R. FR.					
		GY140M BRIGHT LIME GREEN METALLIC	1	-	--------	--------	3IN
	64201-K93-N00ZM	*B216P* PEARL VIVACIOUS BLUE	1	-	--------	--------	3IN
	64201-K93-N00ZJ	*NH177M* VOSTOK SILVER METALLIC	1	-	--------	--------	3IN,IN
	64201-K93-N00ZK	*NH1*.....BLACK	1	-	--------	--------	IN
6	64202-K93-N00ZL	COVER, L. FR.					
		GY140M BRIGHT LIME GREEN METALLIC	1	-	--------	--------	3IN
	64202-K93-N00ZM	*B216P* PEARL VIVACIOUS BLUE	1	-	--------	--------	3IN
	64202-K93-N00ZJ	*NH177M* VOSTOK SILVER METALLIC	1	-	--------	--------	3IN,IN
	64202-K93-N00ZK	*NH1*.....BLACK	1	-	--------	--------	IN
7	64202-K93-N00ZH	COVER, L. FR.(WL)					
		NH196.....ROSS WHITE	1	-	--------	--------	2IN
	64202-K93-N00ZG	*R258*.....WINNING RED	1	-	--------	--------	2IN

F-12 FRONT COVER/INNER COVER

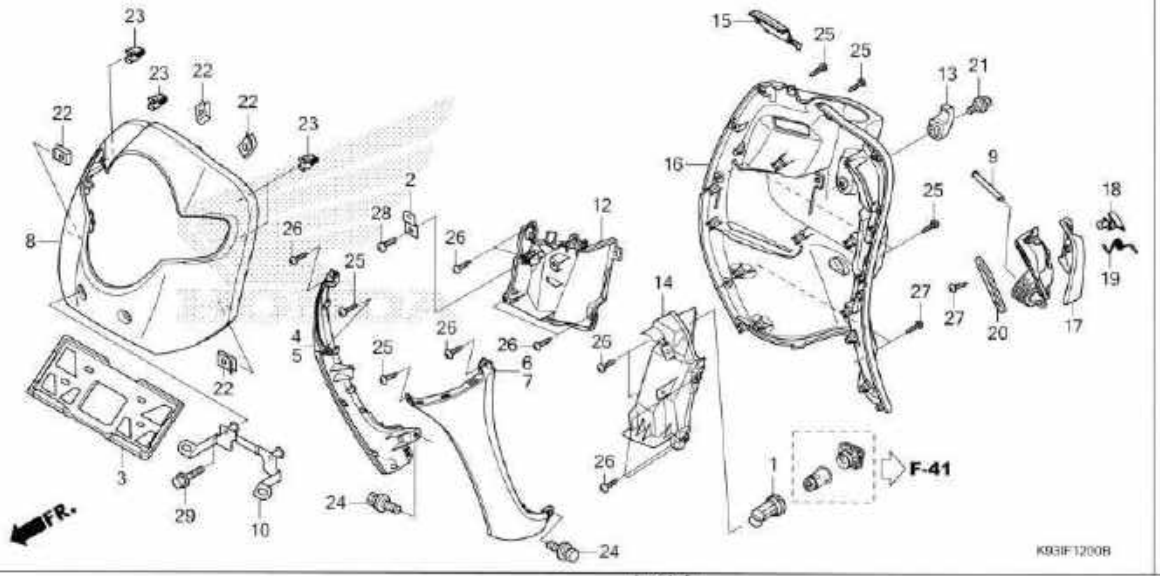

No. Ref.	No. Part	Deskripsi	Jumlah SCOOPY eSP (ACF110) CBS ISS (CBT) 2017(H)	2018(J)	No. Seri		Kode Parts Catalog
7)	64202-K93-N00ZK	COVER, L. FR.(WL)					
		NH1.....BLACK	1	-	--------	--------	2IN
	64202-K93-N00ZK	*NH1*.....BLACK	-	1	--------	--------	2IN,IN
	64202-K93-N00ZH	*NH196*.....ROSS WHITE	-	1	--------	--------	2IN
	64202-K93-N00ZG	*R258*.....WINNING RED	-	1	--------	--------	2IN
	64202-K93-N00ZQ	*NH341P* PEARL FADELESS WHITE	-	1	--------	--------	IN
	64202-K93-N00ZP	*R378M* MAT SOLAR RED METALLIC	-	1	--------	--------	IN
	64202-K93-N00ZN	*YR342M*					
		MAT JASPER BROWN METALLIC	-	1	--------	--------	IN
8	64301-K93-N00ZP	COVER, FR. TOP(WL)					
		NH1.....BLACK	1	-	--------	--------	2IN
	64301-K93-N00ZN	*NH196*.....ROSS WHITE	1	-	--------	--------	2IN
	64301-K93-N00ZM	*R258*.....WINNING RED	1	-	--------	--------	2IN
	64301-K93-N00ZN	*NH196*.....ROSS WHITE	1	-	--------	--------	3IN
	64301-K93-N00ZK	*Y214P*...PEARL MILKY CREAM	1	-	--------	--------	3IN
	64301-K93-N00ZP	*NH1*.....BLACK	1	-	--------	--------	IN
	64301-K93-N00ZL	*YR342M*					
		MAT JASPER BROWN METALLIC	1	-	--------	--------	IN
	64301-K93-N00ZP	*NH1*.....BLACK	-	1	--------	--------	2IN,IN
	64301-K93-N00ZN	*NH196*.....ROSS WHITE	-	1	--------	--------	2IN
	64301-K93-N00ZM	*R258*.....WINNING RED	-	1	--------	--------	2IN
	64301-K93-N00ZR	*NH341P* PEARL FADELESS WHITE	-	1	--------	--------	IN
	64301-K93-N00ZQ	*R378M* MAT SOLAR RED METALLIC	-	1	--------	--------	IN
	64301-K93-N00ZL	*YR342M*					
		MAT JASPER BROWN METALLIC	-	1	--------	--------	IN
9	77215-KZL-930	PIN, SEAT HINGE	1	1			
10	81110-KYT-940	BRACKET, FR. NUMBER PLATE ...	1	1			
12	81131-K93-N00	POCKET, R. INNER	1	1			
13	81132-GAH-000YV	HOOK, LUGGAGE					
		TBLACK.....BLACK	1	1			

3

F-12 FRONT COVER/INNER COVER

No. Ref.	No. Part	Deskripsi	Jumlah SCOOPY eSP (ACF110) CBS (SS (CBT) 2017(n)	2018(n)	No. Seri		Kode Parts Catalog
14	81132-K93-N00	POCKET, L. INNER	1	1			
15	81134-K93-N00ZL	COVER, INNER UPPER					
		NH1.....BLACK	1	1	--------	--------	2IN,IN
	81134-K93-N00ZK	*NH177M* VOSTOK SILVER METALLIC	1	1	--------	--------	3IN,IN
	81134-K93-N00ZJ	*NH196*.....ROSS WHITE	1	-	--------	--------	2IN
	81134-K93-N00ZM	*GY140M*					
		BRIGHT LIME GREEN METALLIC	1	-	--------	--------	3IN
	81134-K93-N00ZN	*B216P* PEARL VIVACIOUS BLUE	1	-	--------	--------	3IN
16	81141-K93-N00ZJ	COVER, INNER(WL)					
		NH1.....BLACK	1	1	--------	--------	2IN,IN
	81141-K93-N00ZL	*NH177M* VOSTOK SILVER METALLIC	1	1	--------	--------	3IN,IN
	81141-K93-N00ZM	*GY140M*					
		BRIGHT LIME GREEN METALLIC	1	-	--------	--------	3IN
	81140-K93-N00ZN	*B216P* PEARL VIVACIOUS BLUE	1	-	--------	--------	3IN
17	81142-K93-N00ZH	LID, L. POCKET					
		R258.....WINNING RED	1	1	--------	--------	2IN
	81142-K93-N00ZJ	*NH196*.....ROSS WHITE	1	1	--------	--------	2IN,3IN
	81142-K93-N00ZG	*YR342M*					
		MAT JASPER BROWN METALLIC	1	1	--------	--------	IN
	81142-K93-N00ZK	*NH1*.....BLACK	1	-	--------	--------	2IN,IN
	81142-K93-N00ZA	*Y214P*...PEARL MILKY CREAM	1	-	--------	--------	3IN
	81142-K93-N00ZL	*R378M* MAT SOLAR RED METALLIC	-	1	--------	--------	IN
	81142-K93-N00ZM	*NH341P* PEARL FADELESS WHITE	-	1	--------	--------	IN
18	81144-K93-N00ZB	KNOB, POCKET LID					
		TBLACK.....BLACK	1	1			
19	81145-K93-N00	SPRING, LID	1	1			
20	81291-K93-N00	SEAL, INNER COVER	1	1			
21	90107-KVB-900	BOLT, SPECIAL, 6MM	1	1			
22	90302-KWW-A00	NUT, SPRING, 4MM	4	4			
23	90666-K59-A11	CLIP, SNAP FITTING(PO)	4	4			
24	93404-06016-00	BOLT-WASHER, 6X16	2	2			
25	93903-24380	SCREW, TAPPING, 4X12	6	6			
26	93903-34310	SCREW, TAPPING, 4X12	11	11			
27	93903-34380	SCREW, TAPPING, 4X12	5	5			
28	93903-35320	SCREW, TAPPING, 5X16	1	1			
29	95701-06032-00	BOLT, FLANGE, 6X32	2	2			

F-14 FLOOR STEP

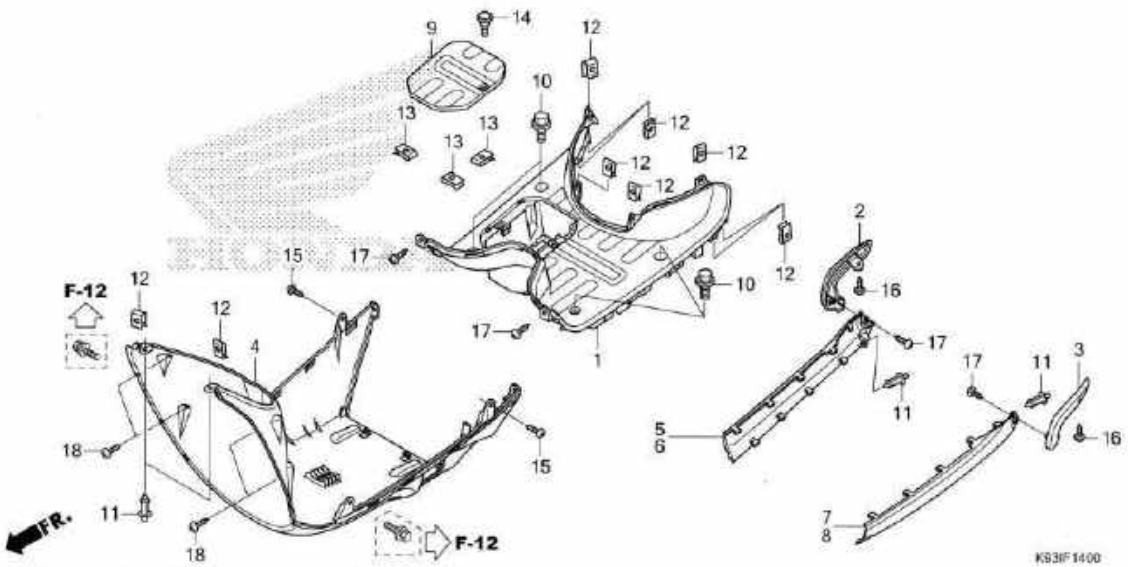

No. Ref.	L.O.N.	(Nomor ref. relatif) Deskripsi	F.R.T.
1	4131D2	STEP, FLOOR.....	1,0
2	4131KQ	COVER, PILLION STEP :RIGHT.....	0,1
3	4131KP	COVER, PILLION STEP :LEFT.....	0,1
	4131KR	COVER, PILLION STEP :KEDUA-DUANYA	0,2
4	4131B4	COVER, UNDER.....	0,4
5		(6)	
	4131J6	COVER, FLOOR SIDE :RIGHT.....	0,1
7		(8)	
	4131J5	COVER, FLOOR SIDE :LEFT.....	0,1
	4131X0	COVER, FLOOR SIDE :KEDUA-DUANYA	0,2
9	6101A1	COVER, BATTERY.....	0,1

No. Ref.	No. Part	Deskripsi	Jumlah SCOOPY eSP(ADF110) CBS ISS (CBT) 2017(-)	2018(-)	No. Seri		Kode Parts Catalog
1	64310-K93-N00ZC	STEP, FLOOR					
		TBLACK.....BLACK	1	1	--------	--------	2IN,3IN
	64310-K93-N00ZB	*YR286R*...CASTAGNA BROWN R	1	1	--------	--------	IN
2	64311-K93-N00	COVER, R. PILLION STEP.....	1	1			
3	64312-K93-N00	COVER, L. PILLION STEP.....	1	1			
4	64340-K93-N00ZB	COVER, UNDER					
		TBLACK.....BLACK	1	1			
5	64421-K93-N00ZH	COVER, R. UNDER SIDE(WL)					
		NH196.....ROSS WHITE	1	-	--------	--------	2IN
	64421-K93-N00ZG	*R258*.....WINNING RED	1	-	--------	--------	2IN
	64421-K93-N00ZK	*NH1*.....BLACK	1	-	--------	--------	2IN
	64421-K93-N00ZK	*NH1*.....BLACK	1	-	--------	--------	IN
	64421-K93-N00ZJ	*NH177M* VOSTOK SILVER METALLIC	1	-	--------	--------	IN
	64421-K93-N00ZK	*NH1*.....BLACK	-	1	--------	--------	2IN,IN
	64421-K93-N00ZH	*NH196*.....ROSS WHITE	-	1	--------	--------	2IN
	64421-K93-N00ZG	*R258*.....WINNING RED	-	1	--------	--------	2IN
	64421-K93-N00ZQ	*NH341P* PEARL FADELESS WHITE	-	1	--------	--------	IN
	64421-K93-N00ZP	*R378M* MAT SOLAR RED METALLIC	-	1	--------	--------	IN
	64421-K93-N00ZN	*YR342M* MAT JASPER BROWN METALLIC	-	1	--------	--------	IN
6	64421-K93-N00ZJ	COVER, R. UNDER SIDE					
		NH177M VOSTOK SILVER METALLIC	1	-	--------	--------	3IN
	64421-K93-N00ZL	*GY140M* BRIGHT LIME GREEN METALLIC	1	-	--------	--------	3IN
	64421-K93-N00ZM	*B216P* PEARL VIVACIOUS BLUE	1	-	--------	--------	3IN
7	64431-K93-N00ZK	COVER, L. UNDER SIDE(WL)					
		NH1.....BLACK	1	-	--------	--------	2IN
	64431-K93-N00ZH	*NH196*.....ROSS WHITE	1	-	--------	--------	2IN

3

F-14 FLOOR STEP

No. Ref.	No. Part	Deskripsi	Jumlah SCOOPY eSP (ACF110) CBS ISS (CBT) 2017(m)	2018(j)	No. Seri		Kode Parts Catalog
7)	64431-K93-N00ZG	COVER, L. UNDER SIDE(WL)					
		R258.....WINNING RED	1	-	--------	--------	2IN
	64431-K93-N00ZJ	*NH177M* VOSTOK SILVER METALLIC	1	-	--------	--------	IN
	64431-K93-N00ZK	*NH1*.....BLACK	1	-	--------	--------	IN
	64431-K93-N00ZK	*NH1*.....BLACK	-	1	--------	--------	2IN,IN
	64431-K93-N00ZH	*NH196*.....ROSS WHITE	-	1	--------	--------	2IN
	64431-K93-N00ZG	*R258*.....WINNING RED	-	1	--------	--------	2IN
	64431-K93-N00ZR	*NH341P* PEARL FADELESS WHITE	-	1	--------	--------	IN
	64431-K93-N00ZQ	*R378M* MAT SOLAR RED METALLIC	-	1	--------	--------	IN
	64431-K93-N00ZL	*YR342M* MAT JASPER BROWN METALLIC	-	1	--------	--------	IN
8	64431-K93-N00ZJ	COVER, L. UNDER SIDE *NH177M* VOSTOK SILVER METALLIC	1	-	--------	--------	3IN
	64431-K93-N00ZL	*GY140M* BRIGHT LIME GREEN METALLIC	1	-	--------	--------	3IN
	64431-K93-N00ZM	*B216P* PEARL VIVACIOUS BLUE	1	-	--------	--------	3IN
9	64460-K93-N00ZC	LID, BATTERY					
		TBLACK.....BLACK	1	1	--------	--------	2IN,3IN
	64460-K93-N00ZB	*YR286R*... CASTAGNA BROWN R	1	1	--------	--------	IN
10	90107-KVB-900	BOLT, SPECIAL, 6MM.....	4	4			
11	90116-SP0-003	CLIP, BUMPER SEAL.....	4	4			
12	90302-KWW-A00	NUT, SPRING, 4MM.....	10	10			
13	90677-KAN-T00	NUT, CLIP, 5MM.....	3	3			
14	91509-GE2-760	SCREW, PAN, 5X11.5.....	1	1			
15	93903-24310	SCREW, TAPPING, 4X12.....	2	2			
16	93903-24380	SCREW, TAPPING, 4X12.....	2	2			
17	93903-34310	SCREW, TAPPING, 4X12.....	4	4			
18	93903-34380	SCREW, TAPPING, 4X12.....	4	4			

F-14-10 PILLION STEP

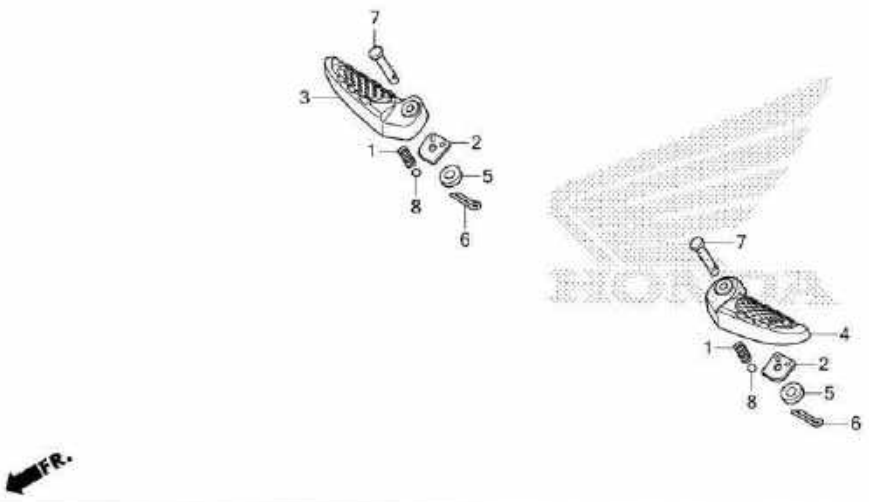

No. Ref.	L.O.N.	(Nomor ref. relatif) Deskripsi	F.R.T.
3	4101C8	BAR, PILLION STEP :RIGHT.....	0,2
4	4101C7	BAR, PILLION STEP :LEFT.....	0,2
	4101P4	BAR, PILLION STEP :KEDUA-DUANYA	0,3

No. Ref.	No. Part	Deskripsi	Jumlah SCOOPY eSP (ACF110) CBS ISS (CBT) 2017(H)	2018(J)	No. Seri	Kode Parts Catalog
1	28333-300-000	SPRING, KICK STARTER STOPPER	2	2		
2	50718-KYT-900	PLATE, PILLION STEP CLICK ...	2	2		
3	50720-K16-900	ARM, R. PILLION STEP	1	1		
4	50730-K16-900	ARM, L. PILLION STEP	1	1		
5	94101-06000	WASHER, PLAIN, 6MM	2	2		
6	94201-16150	PIN, SPLIT, 1.6X15	2	2		
7	95015-81000	PIN A, PILLION STEP	2	2		
8	96211-08000	BALL, STEEL, #8(1/4)	2	2		

F-15 BODY COVER

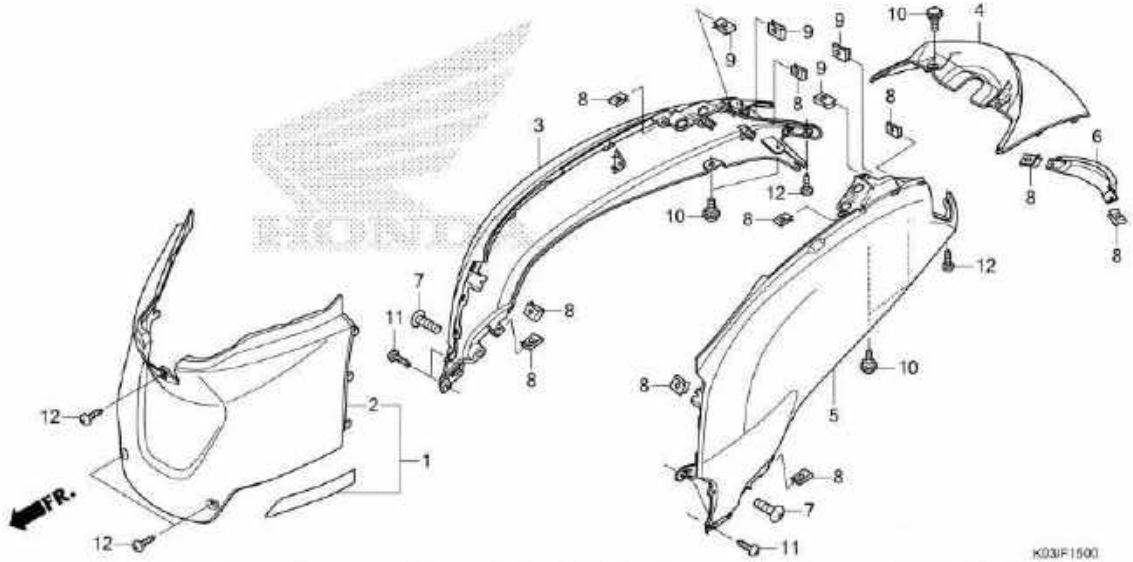

No. Ref.	L.O.N.	(Nomor ref. relatif) Deskripsi	F.R.T.
1		(2)	
	4131R6	COVER, BODY :CENTER.....	0,1
3	4131J0	COVER, BODY :RIGHT.....	0,6
4	4131J8	COVER, REAR CENTER.....	0,1
5	4131H9	COVER, BODY :LEFT.....	0,6
	4131J1	COVER, BODY :KEDUA-DUANYA.....	0,6
6	413124	COVER, REAR UNDER.....	0,1

No. Ref.	No. Part	Deskripsi	Jumlah SCOOPY eSP (ACF110) CBS ISS (CBT) 2017(H) 2018(J)		No. Seri		Kode Parts Catalog
1	80151-K93-N00ZM	COVER, CENTER(WL)					
		NH1.....BLACK	1	-	--------	--------	2IN
	80151-K93-N00ZK	*NH196*.....ROSS WHITE	1	-	--------	--------	2IN
2	80151-K93-N00ZL	COVER, CENTER					
		NH177M VOSTOK SILVER METALLIC	1	1	--------	--------	3IN,IN
	80151-K93-N00ZN	*GY140M* BRIGHT LIME GREEN METALLIC	1	-	--------	--------	3IN
	80151-K93-N00ZP	*B216P*PEARL VIVACIOUS BLUE	1	-	--------	--------	3IN
	80151-K93-N00ZM	*NH1*.....BLACK	1	-	--------	--------	IN
	80151-K93-N00ZK	*NH196*.....ROSS WHITE	-	1	--------	--------	2IN
	80151-K93-N00ZQ	*R258*.....WINNING RED	-	1	--------	--------	2IN
	80151-K93-N00ZM	*NH1*.....BLACK	-	1			
3	83500-K93-N00ZM	COVER, R. BODY(WL)					
		NH196.....ROSS WHITE	1	-	--------	--------	2IN
	83500-K93-N00ZL	*R258*.....WINNING RED	1	-	--------	--------	2IN
	83500-K93-N00ZN	*NH1*.....BLACK	1	-	--------	--------	2IN
	83500-K93-N00ZM	*NH196*.....ROSS WHITE	1	-	--------	--------	3IN
	83500-K93-N00ZA	*Y214P*...PEARL MILKY CREAM	1	-	--------	--------	3IN
	83500-K93-N00ZK	*YR342M* MAT JASPER BROWN METALLIC	1	-	--------	--------	IN
	83500-K93-N00ZN	*NH1*.....BLACK	1	-	--------	--------	IN
	83500-K93-N00ZN	*NH1*.....BLACK	-	1	--------	--------	2IN,IN
	83500-K93-N00ZQ	*NH341P* PEARL FADELESS WHITE	-	1	--------	--------	IN
	83500-K93-N00ZP	COVER, R. BODY(WL) *R378M* MAT SOLAR RED METALLIC	-	1	--------	--------	IN
	83500-K93-N00ZK	*YR342M* MAT JASPER BROWN METALLIC	-	1	--------	--------	IN
4	83750-K93-N00ZG	COVER, RR. CENTER(WL)					
		R258.....WINNING RED	1	-	--------	--------	2IN

F-15 BODY COVER

No. Ref.	No. Part	Deskripsi	Jumlah SCOOPY eSP (ACF110) CBS ISS (CBT) 2017(H)	2018(J)	No. Seri		Kode Parts Catalog
4)	83750-K93-N00ZK	COVER, RR. CENTER(WL)					
		NH1.....BLACK	1	-	--------	--------	2IN
	83750-K93-N00ZH	*NH196*.....ROSS WHITE	1	-	--------	--------	2IN,3IN
	83750-K93-N00ZA	*Y214P*...PEARL MILKY CREAM	1	-	--------	--------	3IN
	83750-K93-N00ZK	*NH1*.....BLACK	1	-	--------	--------	IN
	83750-K93-N00ZJ	*NH177M*VOSTOK SILVER METALLIC	1	-	--------	--------	IN
	83750-K93-N00ZK	*NH1*.....BLACK	-	1	--------	--------	2IN,IN
	83750-K93-N00ZN	*NH341P* PEARL FADELESS WHITE	-	1	--------	--------	IN
	83750-K93-N00ZM	*R378M* MAT SOLAR RED METALLIC	-	1	--------	--------	IN
	83750-K93-N00ZL	*YR342M* MAT JASPER BROWN METALLIC	-	1	--------	--------	IN
5	83600-K93-N00ZM	COVER, L. BODY(WL)					
		NH196.....ROSS WHITE	1	-	--------	--------	2IN
	83600-K93-N00ZL	*R258*.....WINNING RED	1	-	--------	--------	2IN
	83600-K93-N00ZN	*NH1*.....BLACK	1	-	--------	--------	2IN
	83600-K93-N00ZM	*NH196*.....ROSS WHITE	1	-	--------	--------	3IN
	83600-K93-N00ZA	*Y214P*...PEARL MILKY CREAM	1	-	--------	--------	3IN
	83600-K93-N00ZK	*YR342M* MAT JASPER BROWN METALLIC	1	-	--------	--------	IN
	83600-K93-N00ZN	*NH1*.....BLACK	1	-	--------	--------	IN
	83600-K93-N00ZN	*NH1*.....BLACK	-	1	--------	--------	2IN,IN
	83600-K93-N00ZQ	*NH341P* PEARL FADELESS WHITE	-	1	--------	--------	IN
	83600-K93-N00ZP	*R378M* MAT SOLAR RED METALLIC	-	1	--------	--------	IN
	83600-K93-N00ZK	*YR342M* MAT JASPER BROWN METALLIC	-	1	--------	--------	IN
6	83650-K93-N00ZK	COVER, RR. CENTER LOWER					
		R258.....WINNING RED	1	-	--------	--------	2IN
	83650-K93-N00ZL	*NH196*.....ROSS WHITE	1	-	--------	--------	2IN,3IN
	83650-K93-N00ZN	*NH1*.....BLACK	1	-	--------	--------	2IN,IN
	83650-K93-N00ZA	*Y214P*...PEARL MILKY CREAM	1	-	--------	--------	3IN
	83650-K93-N00ZM	*NH177M*VOSTOK SILVER METALLIC	1	-	--------	--------	IN
	83650-K93-N00ZN	*NH1*.....BLACK	-	1	--------	--------	2IN,IN
	83650-K93-N00ZP	*YR342M* MAT JASPER BROWN METALLIC	-	1	--------	--------	IN
	83650-K93-N00ZQ	*R378M*MAT SOLAR RED METALLIC	-	1	--------	--------	IN
	83650-K93-N00ZR	*NH341P* PEARL FADELESS WHITE	-	1	--------	--------	IN
7	90107-KGH-600	SCREW, 6X12	2	2			
8	90302-KWW-A00	NUT, SPRING, 4MM	10	10			
9	90677-KAN-T00	NUT, CLIP, 5MM	4	4			
10	91509-GE2-760	SCREW, PAN, 5X11.5	6	6			
11	93903-24310	SCREW, TAPPING, 4X12	4	4			
12	93903-24380	SCREW, TAPPING, 4X12	5	5			

3

F-17 FRONT FORK

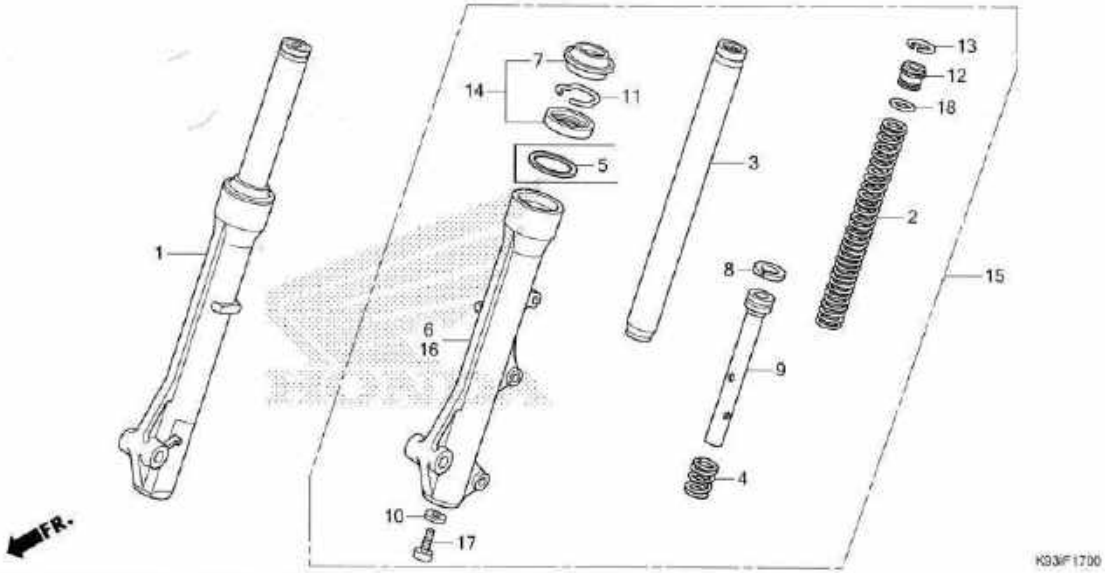

No. Ref.	L.O.N.	(Nomor ref. relatif) Deskripsi	F.R.T.
1	5111C3	FORK ASSY., FRONT :RIGHT.....	0,4
2	5111C5	SPRING, FRONT FORK :LEFT.....	0,6
	5111C6	SPRING, FRONT FORK :RIGHT.....	0,6
	5111C7	SPRING, FRONT FORK :KEDUA-DUANYA	0,9
3		(4,8,9)	
	5111G2	PIPE, FRONT FORK :LEFT.....	0,8
	5111G3	PIPE, FRONT FORK :RIGHT.....	0,8
	5111G4	PIPE, FRONT FORK :KEDUA-DUANYA	1,3
6	5111D2	CASE, BOTTOM :RIGHT.....	0,9
14	5111E7	SEAL SET, FRONT FORK :LEFT.....	0,9
	5111E8	SEAL SET, FRONT FORK :RIGHT....	0,9
	5111E9	SEAL SET, FRONT FORK :KEDUA-DUANYA	1,5
15	5111C2	FORK ASSY., FRONT :LEFT.....	0,4
	5111C4	FORK ASSY., FRONT :KEDUA-DUANYA	0,5
16	5111D1	CASE, BOTTOM :LEFT.....	0,9
	5111D3	CASE, BOTTOM :KEDUA-DUANYA.....	1,5

No. Ref.	No. Part	Deskripsi	Jumlah SCOOPY eSP(ACF110) CBS ISS (CBT) 2017(H)	2018(J)	No. Seri		Kode Parts Catalog
1	51400-K81-N01	FORK ASSY., R. FR.(SH)	1	1	--------	--------	2IN,3IN
	51400-K93-N02	FORK ASSY., R. FR.(KY)	1	1	--------	--------	IN
2	51401-KZR-601	SPRING, FR. FORK(SH)	2	2	--------	--------	2IN,3IN
	51401-K93-N02	SPRING, FR. FORK(KY)	2	2	--------	--------	IN
3	51410-KZL-A01	PIPE COMP., FR. FORK(SH)	2	2	--------	--------	2IN,3IN
	51410-K93-N02	PIPE COMP., FR. FORK(KY)	2	2	--------	--------	IN
4	51412-GN5-901	SPRING, REBOUND(SH)	2	2	--------	--------	2IN,3IN
	51411-KVG-901	SPRING, REBOUND	2	2	--------	--------	IN
5	51412-KWB-601	RING, BACK UP	2	2	--------	--------	2IN,3IN
6	51420-K81-N01	CASE COMP., R. FR. BOTTOM(SH)	1	1	--------	--------	2IN,3IN
	51420-K93-N02	CASE, R. FR. BOTTOM(KY)	1	1	--------	--------	IN
7	51425-GN5-901	SEAL, DUST(SH)	2	2	--------	--------	2IN,3IN
	51425-K93-N02	SEAL, DUST(KY)	2	2	--------	--------	IN
8	51437-KWB-601	RING, PISTON	2	2	--------	--------	2IN,3IN
	51437-KVG-901	.....	2	2	--------	--------	IN
9	51470-K81-N01	PIPE, SEAT(SH)	2	2	--------	--------	2IN,3IN
	51440-K93-N02	PIPE, SEAT(KY)	2	2	--------	--------	IN
10	90544-283-000	WASHER, SPECIAL, 8MM(SH)	2	2	--------	--------	2IN,3IN
	51442-K93-N02	WASHER, OIL BOLT	2	2	--------	--------	IN
11	51466-065-901	RING, OIL SEAL STOPPER(SH) ..	2	2	--------	--------	2IN,3IN
	51447-KVG-901	RING, SNAP	2	2	--------	--------	IN
12	51454-KEV-881	SEAT B, SPRING	2	2	--------	--------	2IN,3IN
	51454-K93-N02	CAP, FR. FORK	2	2	--------	--------	IN
13	51456-KPH-901	RING, STOPPER	2	2	--------	--------	2IN,3IN
	51456-K93-N02	RING, SNAP(KY)	2	2	--------	--------	IN
14	51490-KGH-901	SEAL SET, FR. FORK(SH)	2	2	--------	--------	2IN,3IN
	51490-K93-N02	SEAL SET, FR. FORK(KY)	2	2	--------	--------	IN
15	51500-K81-N01	FORK ASSY., L. FR.(SH)	1	1	--------	--------	2IN,3IN

F-17 FRONT FORK

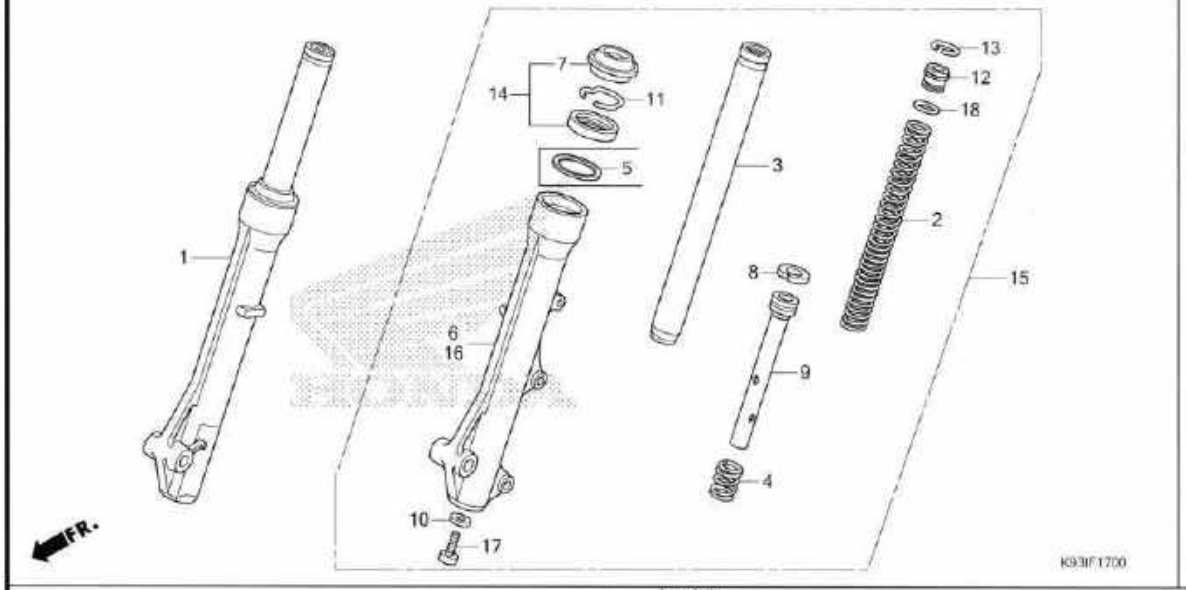

No. Ref.	No. Part	Deskripsi	Jumlah SCOOPY eSP (KCF1K) 2017(9)	Jumlah CBS ISS (CBT) 2018(J)	No. Seri		Kode Parts Catalog
15)	51500-K93-N02	FORK ASSY., L. FR.(KY)	1	1	--------	--------	IN
16	51520-K81-N01	CASE COMP., L. FR. BOTTOM(SH)	1	1	--------	--------	2IN,3IN
	51520-K93-N02	CASE, L. FR. BOTTOM(KY)	1	1	--------	--------	IN
17	90116-KV3-701	BOLT, SOCKET, 8MM(SH)	2	2	--------	--------	2IN,3IN
	90116-KVG-A31	BOLT, SOCKET, 10X25	2	2	--------	--------	IN
18	91356-GM0-003	O-RING, 15.8X2.4(SH)	2	2	--------	--------	2IN,3IN
	91356-KVG-901	O-RING, 16.8X2.4	2	2	--------	--------	IN

3

F-18 FRONT BRAKE CALIPER

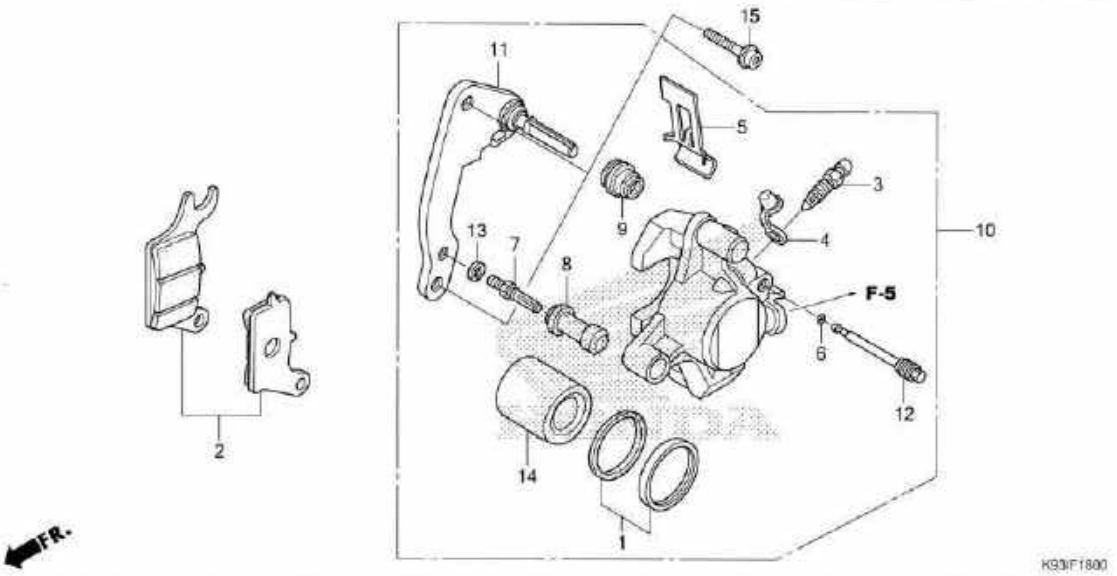

No. Ref.	L.O.N.	(Nomor ref. relatif) Deskripsi	F.R.T.
2	711115	SHOE(PAD) SET, BRAKE :FRONT....	0,1
10	711130	CALIPER, FRONT BRAKE.....	0,4
		.TERMASUK: Pembuangan angin palsu	
11	7111G0	BRACKET, FRONT CALIPER.....	0,2
14		(1)	
	7111D1	PISTON, FRONT BRAKE CALIPER....	0,5
		.TERMASUK: Pembuangan angin palsu	

No. Ref.	No. Part	Deskripsi	Jumlah SCOOPY eSP (ACF110) CBS ISS (CBT) 2017(H)	2018(J)	No. Seri	Kode Parts Catalog
1	06451-961-405	SEAL SET, PISTON	1	1		
2	06455-K46-N21	PAD SET, FR. BRAKE	1	1		
3	43352-568-003	SCREW, BLEEDER(NI)	1	1		
	43352-K81-N01	SCREW, BLEEDER	1	1		
4	43353-461-771	CAP, BLEEDER	1	1		
5	45108-KVB-T01	SPRING, PAD	1	1		
6	45111-MAJ-G41	RING, STOPPER	1	1		
7	45131-GZ0-006	BOLT, PIN	1	1		
	45131-K81-N01	.....	1	1		
8	45132-166-016	BOOT, PIN BUSH	1	1		
9	45133-MA3-006	BOOT B	1	1		
10	45150-K93-N01	CALIPER SUB ASSY., L. FR. ...	1	1		
11	45190-KZL-A01	BRACKET SUB ASSY., FR. CALIPER	1	1		
12	45215-KPH-951	PIN, HANGER	1	1		
13	45216-166-006	WASHER, WAVE	1	1		
14	45218-KWB-601	PISTON	1	1		
15	90131-KPH-880	BOLT, TORX, 8X25	2	2		

F-20-40 FRONT WHEEL

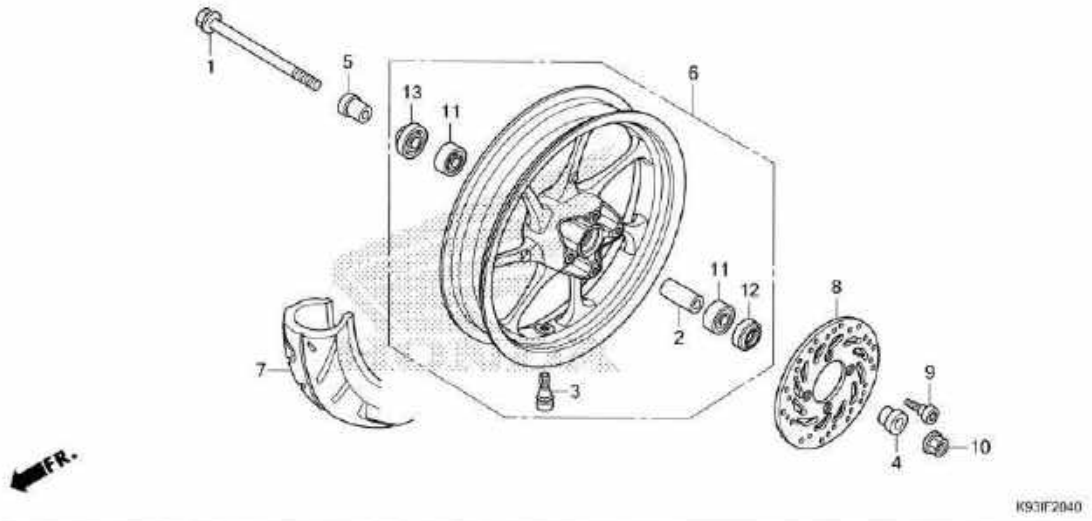

No. Ref.	L.O.N.	(Nomor ref. relatif) Deskripsi	F.R.T.
1		(12,13)	
	710151	AXLE, FRONT WHEEL.....	0,2
6	7101D4	FRONT WHEEL.....	0,6
7	710139	FRONT TIRE(SATU).....	0,5
8	711120	DISC, FRONT BRAKE.....	0,3
11	710115	BEARING, FRONT WHEEL(SATU).....	0,4
	710115G	.Ganti 1 bearing tambahkan.....	0,1

No. Ref.	No. Part	Deskripsi	Jumlah SCOOPY eSP(ACF70) CBS ISS (CBT) 2017(H)	2018(J)	No. Seri		Kode Parts Catalog
1	42301-KFM-900	AXLE, RR. WHEEL ..... (FOR FR.)	1	1			
2	42620-KTR-700	COLLAR, RR. AXLE DISTANCE ... (FOR FR.)	1	1			
3	42753-GM9-743	VALVE, RIM(IR)	1	1			
	42753-KWF-901	VALVE, RIM(TR)	1	1			
4	44311-KVB-910	COLLAR, FR. WHEEL SIDE	1	1			
5	44312-KZR-600	COLLAR, FR. WHEEL SIDE	1	1			
6	44650-K93-N00ZA	WHEEL SUB ASSY., FR. *NH303M* MAT AXIS GRAY METALLIC	1	1	--------	--------	2IN,3IN
	44650-K93-N00ZB	*NH255M* SHIMMER SILVER METALLIC	1	1	--------	--------	IN
7	44711-K93-N01	TIRE, FR.(IRC)(100/90-12 59J)	1	1			
8	45351-K81-N31	DISK, FR. BRAKE(YT)	1	1			
	45351-K93-N01	DISK, FR. BRAKE(NH)	1	1			
	45351-KVB-931	DISK, FR. BRAKE(YT)	1	1			
	45351-KVB-S02	DISK, FR. BRAKE(SS)	1	1			
9	90105-KGH-900	BOLT, BRAKE DISK, 8X24	4	4			
10	90306-KGH-901	NUT, U, 12MM	1	1			
11	91052-K03-N41	BEARING, RADIAL BALL(6201U L) (SK)	2	2			
	91052-K24-901	BEARING, RADIAL BALL(6201U L) (NS)	2	2			
	91052-K24-902	BEARING, RADIAL BALL(6201U L) (NT)	2	2			
	91052-K24-903	BEARING, RADIAL BALL(6201U L) (FU)	2	2			

F-20-40 FRONT WHEEL

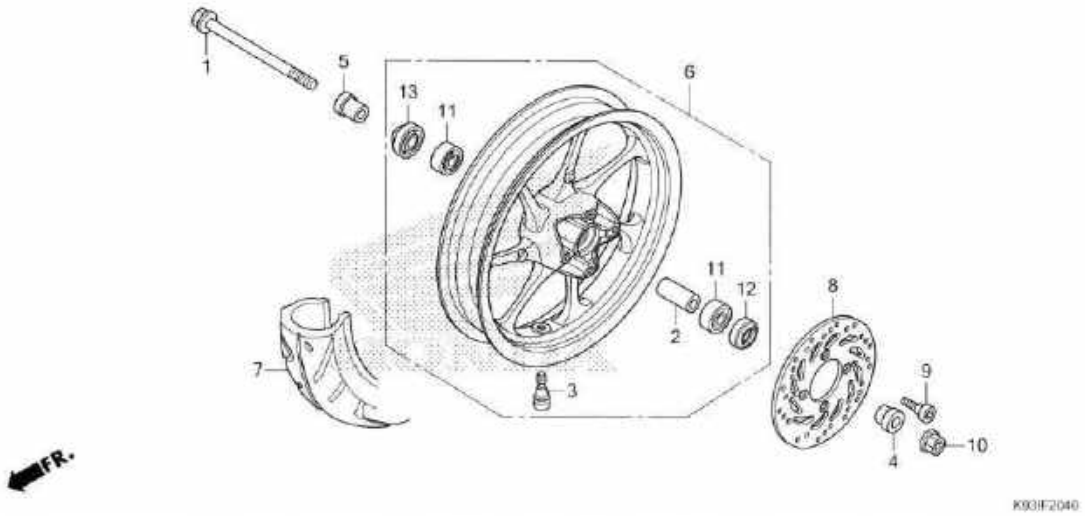

No. Ref.	No. Part	Deskripsi	Jumlah SCOOPY eSP (ACF110) CBS ISS (CBT) 2017(ek)	2018(u)	No. Seri	Kode Parts Catalog
11)	91052-K24-904	BEARING, RADIAL BALL(62D1U L) (FA)	2	2		
12	91251-KPH-901	DUST SEAL, 21x37x7	1	1		
13	91251-KZR-601	DUST SEAL, 21X32X5	1	1		

F-22-30 REAR WHEEL

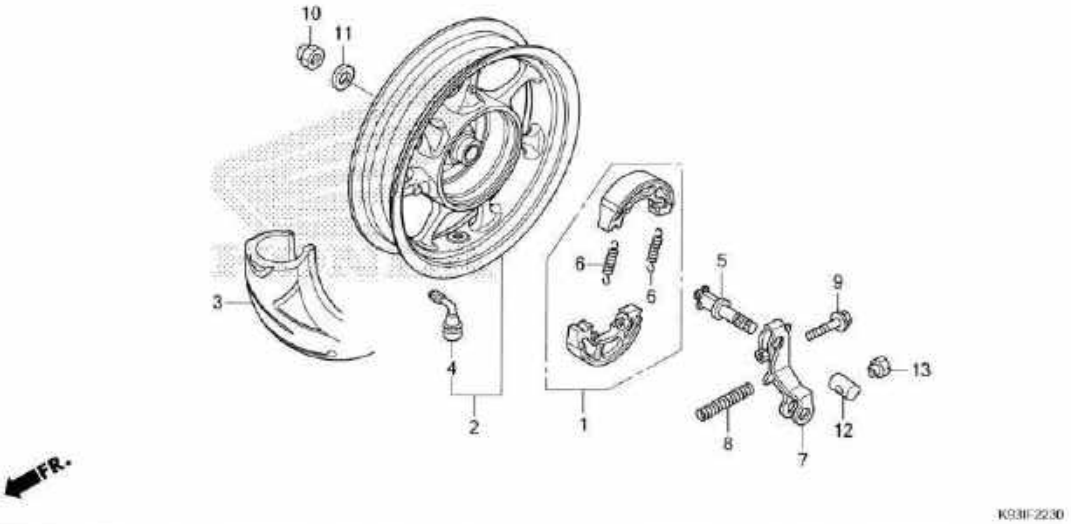

No. Ref.	L.O.N.	(Nomor ref. relatif) Deskripsi	F.R.T.
1	711140	SHOE(PAD) SET, BRAKE :REAR.....	0,4
2	710118	REAR WHEEL.....	0,6
3	710142	REAR TIRE(SATU).....	0,6
5	7111B4	CAM, BRAKE :REAR.....	0,5
7	7111C4	ARM, BRAKE :REAR.....	0,5

No. Ref.	No. Part	Deskripsi	Jumlah SCOOPY eSP (ACF110) CBS ISS (CBT) 2017(H)	2018(J)	No. Seri		Kode Parts Catalog
1	06430-KWN-900	SHOE SET, BRAKE(JB)	1	1			
	06430-KZL-930	SHOE SET, BRAKE(ASK)	1	1			
2	42650-K93-N00ZA	WHEEL SUB ASSY., RR. *NH303M* MAT AXIS GRAY METALLIC	1	1	--------	--------	2IN,3IN
	42650-K93-N00ZB	*NH255M* SHIMMER SILVER METALLIC	1	1	--------	--------	IN
3	42711-K93-N01	TIRE, RR.(110/90-12 64J)	1	1			
4	42753-KJ9-005	VALVE, RIM(IR)	1	1			
	42753-KWP-E01	VALVE, RIM(TR)	1	1			
5	43141-KVB-900	CAM, RR. BRAKE	1	1			
6	43151-329-000	SPRING, BRAKE SHOE	2	2			
7	43410-KVB-900	ARM, RR. BRAKE	1	1			
8	43472-KVB-900	SPRING, RR. BRAKE ARM	1	1			
9	90112-KVB-900	BOLT, FLANGE, 6X32	1	1			
10	90305-KVB-901	NUT, U, 16MM	1	1			
11	90501-KBN-900	WASHER, 16MM	1	1			
12	95015-32001	JOINT B, BRAKE ARM	1	1			
13	95015-42000	NUT B, BRAKE ROD ADJUSTING ..	1	1			

F-24 SEAT/LUGGAGE BOX

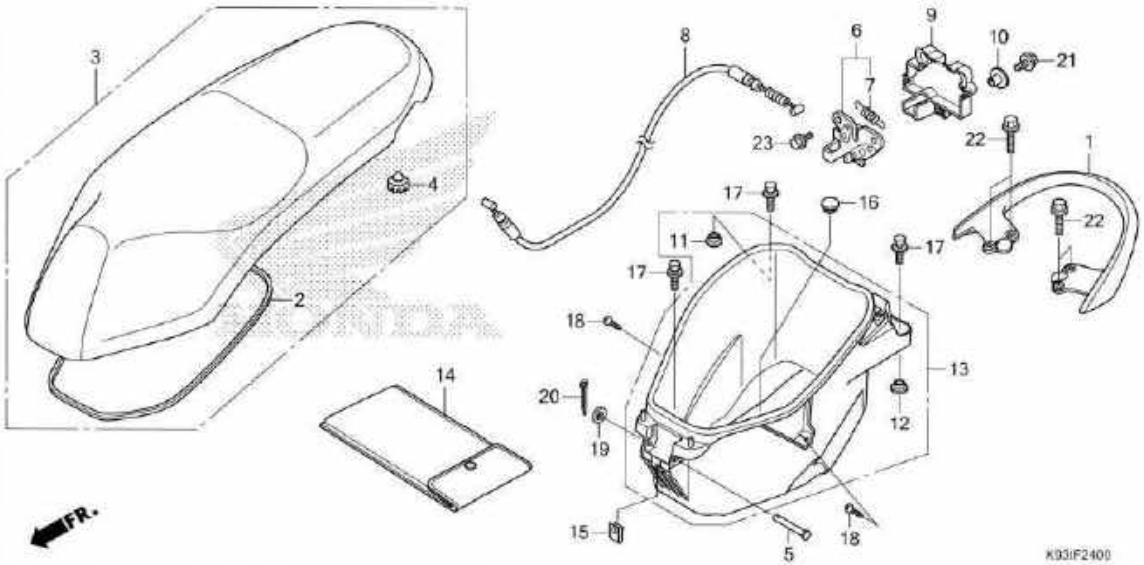

No. Ref.	L.O.N.	(Nomor ref. relatif) Deskripsi	F.R.T.
1	4131F6	RAIL, GRAB :REAR.....	0,1
3	4131E4	SEAT :DOUBLE.....	0,2
6	4131E8	CATCH, SEAT :REAR SIDE.....	0,6
8	811175	CABLE, SEAT LOCK.....	0,8
13	412102	BOX, LUGGAGE.....	0,5

No. Ref.	No. Part	Deskripsi	Jumlah SCOOPY eSP (ACF110) CBS ISS (CBT) 2017(th)	2018(y)	No. Seri		Kode Parts Catalog
1	50410-K93-N00ZD	RAIL, RR. GRAB *NH303M* MAT AXIS GRAY METALLIC	1	1	--------	--------	2IN,3IN
	50410-K93-N00ZE	*NHA30M* DIGITAL SILVER METALLIC	1	1	--------	--------	IN
2	77115-K93-N00	RUBBER, SEAL	1	1			
3	77200-K93-N00ZB	SEAT COMP., DOUBLE *TYPE1*.....	1	1	--------	--------	2IN,3IN
	77200-K93-N00ZA	*TYPE2*.....	1	1	--------	--------	IN
4	77215-KW7-900	RUBBER C, SEAT SETTING	2	2			
5	77215-KZL-930	PIN, SEAT HINGE	1	1			
6	77230-K16-900	CATCH COMP., SEAT	1	1			
7	77234-GN2-000	SPRING, SEAT LOCK	1	1			
8	77240-K93-N01	CABLE COMP., SEAT LOCK	1	1			
9	77244-K16-A00	COVER, SEAT CATCH	1	1			
10	77245-K93-N00	COLLAR, SEAT CATCH COVER	1	1			
11	81201-K81-N00	COLLAR, LUGGAGE BOX	1	1			
12	81202-K81-N00	COLLAR, LUGGAGE BOX	1	1			
13	81250-K93-N00	BOX, LUGGAGE	1	1			
14	83642-171-000	BAG, OWNERS MANUAL	1	1			
15	90302-KWW-A00	NUT, SPRING, 4MM	1	1			
16	90656-GCC-000ZE	PLUG, HOLE *TBLACK*.....BLACK	1	1			
17	93404-06018-00	BOLT-WASHER, 6X18	3	3			
18	93903-24410	SCREW, TAPPING, 4X16	2	2			
19	94101-08000	WASHER, PLAIN, 8MM	1	1			
20	94201-16180	PIN, SPLIT, 1.6X18	1	1			

F-24 SEAT/LUGGAGE BOX

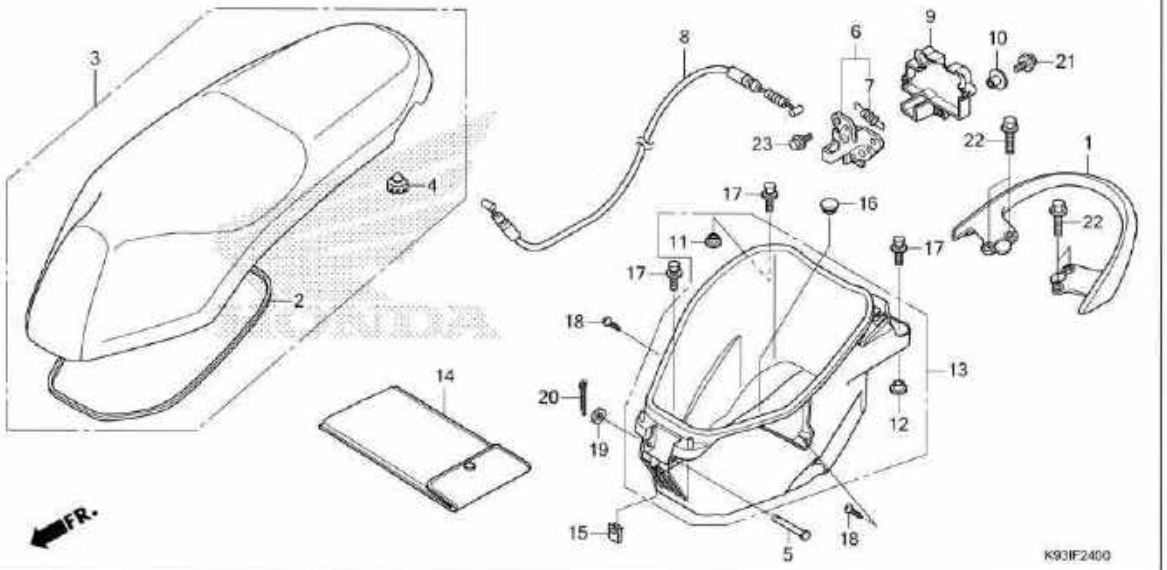

No. Ref.	No. Part	Deskripsi	Jumlah SCOOPY eSP (KCF110) CBS ISS (CBT) 2017(n)	Jumlah SCOOPY eSP (KCF110) CBS ISS (CBT) 2018(J)	No. Seri	Kode Parts Catalog
21	95701-06022-00	BOLT, FLANGE, 6X22	1	1		
22	95701-08022-00	BOLT, FLANGE, 8X22	4	4		
23	96001-06010-00	BOLT, FLANGE, 6X10	2	2		

3

F-26 FUEL TANK

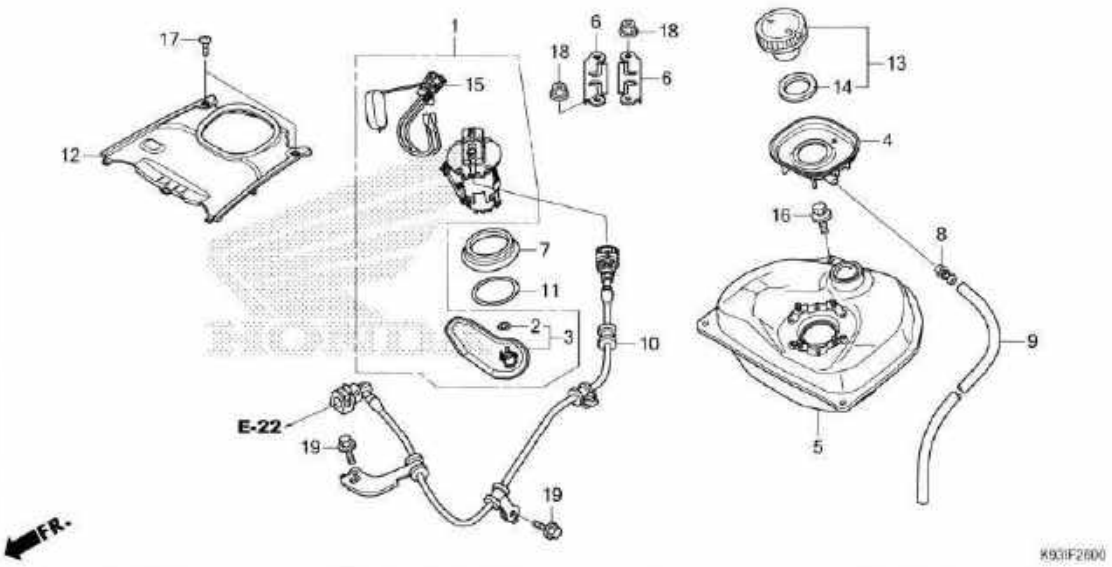

No. Ref.	L.O.N.	(Nomor ref. relatif) Deskripsi	F.R.T.
1		(7,11)	
	310120	PUMP ASSY., FUEL	0,4
3		(2)	
	3101C7	FILTER, FUEL	0,5
5	310100	TANK, FUEL	0,7
10	310162	HOSE, FUEL FEED	0,7
12	413121	COVER, FUEL TANK TOP	0,1
15	617105	FUEL TANK SENDING UNIT	0,5

No. Ref.	No. Part	Deskripsi	Jumlah SCOOPY 6SP (ACF110) CBS (SS) (CBT) 2017(K) 2018(J)		No. Seri	Kode Parts Catalog
1	16700-K81-N01	PUMP UNIT, FUEL	1	1		
2	16706-KVB-S51	O-RING(P7)	1	1		
3	16707-KZR-601	FILTER SET	1	1		
4	17505-K81-N00	TRAY, FUEL	1	1		
5	17510-K81-N00	TANK COMP., FUEL	1	1		
6	17517-GGL-J00	RETAINER, FUEL PUMP	2	2		
7	17518-GHB-601	SEAL, DUST(OH)	1	1		
	17518-GHB-602	SEAL, DUST(CA)	1	1		
	17518-GHB-603	SEAL, DUST(TS)	1	1		
8	17525-KBN-900	JOINT, FUEL TUBE	1	1		
9	17526-K59-A10	TUBE, DRAIN	1	1		
10	17528-K93-N01	HOSE COMP., FUEL FEED	1	1		
11	17572-GHB-601	O-RING, FUEL PUMP(AR)	1	1		
	17572-GHB-602	O-RING, FUEL PUMP(IK)	1	1		
12	17575-K93-N00	COVER, FUEL TANK	1	1		
13	17620-KGH-600	CAP, FUEL FILLER	1	1		
14	17631-KEV-900	PACKING, FUEL FILLER CAP	1	1		
15	37800-K81-N01	FUEL UNIT	1	1		
16	93404-06016-00	BOLT-WASHER, 6X16	1	1		
17	93903-24380	SCREW, TAPPING, 4X12	2	2		
18	94050-06000	NUT, FLANGE, 6MM	4	4		
19	95701-06012-00	BOLT, FLANGE, 6X12	2	2		

F-28 AIR CLEANER

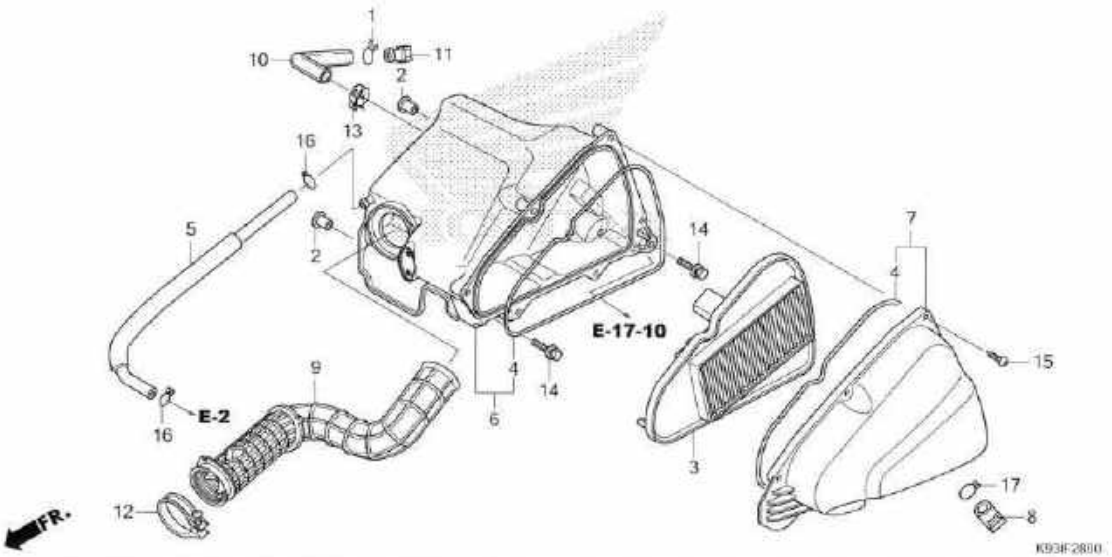

No. Ref.	L.O.N.	(Nomor ref. relatif) Deskripsi	F.R.T.
3		(4)	
	312105	ELEMENT, AIR CLEANER.....	0,1
6	3121A5	CASE, AIR CLEANER.....	0,7
7	312102	COVER, AIR CLEANER CASE.....	0,1
9	3121B6	TUBE, AIR CLEANER CONNECTING...	0,7

No. Ref.	No. Part	Deskripsi	Jumlah SCOOPY eSP (ACF110) CBS ISS (CBT) 2017(H)	2018(J)	No. Seri	Kode Parts Catalog
1	15771-KV6-000	CLIP, OIL DRAIN TUBE	1	1		
2	17208-GFM-970	COLLAR, AIR CLEANER SETTING .	2	2		
3	17210-K93-N00	ELEMENT COMP., AIR CLEANER ..	1	1		
4	17213-K16-900	SEAL A, AIR CLEANER	2	2		
5	17218-K50-T00	TUBE, BREATHER	1	1		
6	17225-K93-N00	CASE SUB ASSY., AIR CLEANER .	1	1		
7	17235-K46-N20	COVER SUB ASSY., AIR CLEANER	1	1		
8	17236-KVB-900	PLUG, AIR CLEANER DRAIN	1	1		
9	17253-K50-T00	TUBE, AIR CLEANER CONNECTING	1	1		
10	17366-428-670	TUBE A, DRAIN	1	1		
11	17370-382-870	PLUG, BREATHER TUBE	1	1		
12	90652-KZL-930	BAND, AIR CLEANER CONNECTING TUBE(42)	1	1		
13	91406-KFN-850	CLAMP, TUBE(D14.5)	1	1		
	91406-MS8-000	.....	1	1		
14	93404-06040-08	BOLT-WASHER, 6X40	2	2		
15	93903-25480	SCREW, TAPPING, 5X20	6	6		
16	95002-02130	CLIP, TUBE(B12.5)	2	2		
17	95002-80000	CLIP, TUBE(C12)	1	1		

3

F-30 EXHAUST MUFFLER

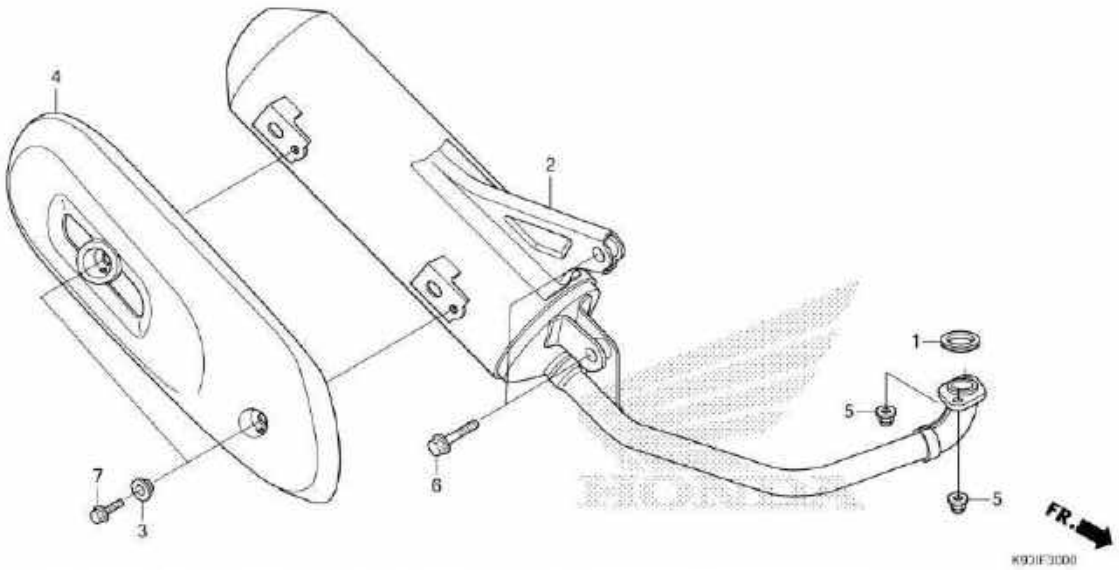

No. Ref.	L.O.N.	(Nomor ref. relatif) Deskripsi	F.R.T.
1	313184	GASKET, EXHAUST PIPE.....	0,2
2	313120	MUFFLER.....	0,2
4	313121	PROTECTOR, MUFFLER.....	0,1

No. Ref.	No. Part	Deskripsi	Jumlah SCOOPY eSP (ACF110) CBS ISS (CBT) 2017(H)	2018(J)	No. Seri	Kode Parts Catalog
1	18291-KVB-900	GASKET, EX. PIPE	1	1		
2	18300-K93-N00	MUFFLER COMP., EX.	1	-		
	18300-K93-N30	.....	-	1		
3	18316-K50-T00	COLLAR, MUFFLER PROTECTOR ...	2	2		
4	18318-K93-N00ZK	COVER, MUFFLER *NH1*.....BLACK	1	1		
5	90202-ZV0-000	NUT, CAP, 6MM	2	2		
6	95701-10040-07	BOLT, FLANGE, 10X40	2	2		
7	95801-06016-02	BOLT, FLANGE, 6X16	2	2		

F-35 STAND/KICK STARTER ARM

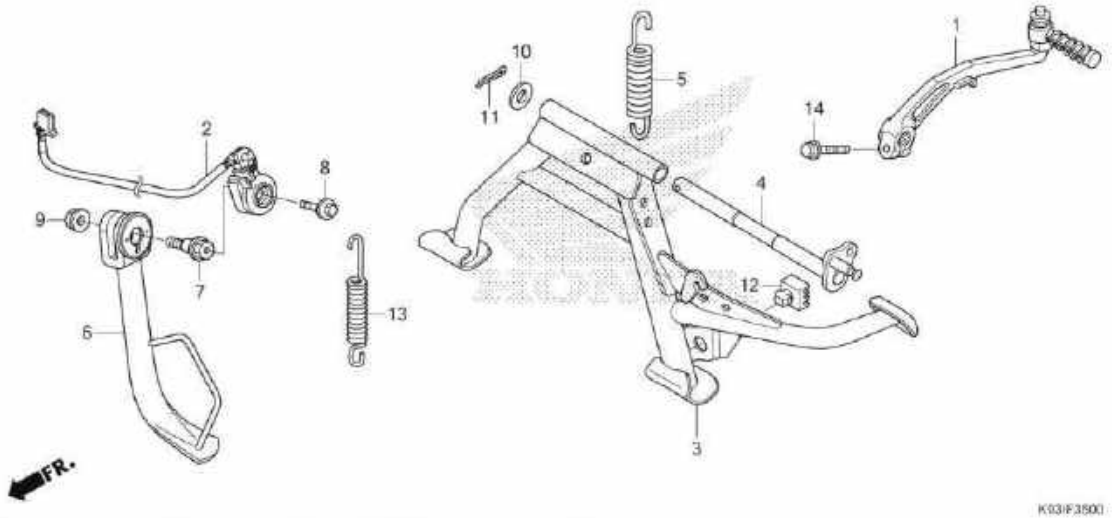

No. Ref.	L.O.N.	(Nomor ref. relatif) Deskripsi	F.R.T.
1	112107	ARM, KICK STARTER.....	0,1
2	615195	SWITCH, SIDE STAND.....	0,4
3		(4)	
	410175	STAND, MAIN.....	0,3
5	410176	SPRING, MAIN STAND.....	0,2
6	410180	BAR, SIDE STAND.....	0,2
13	410182	SPRING, SIDE STAND.....	0,1

No. Ref.	No. Part	Deskripsi	Jumlah SCOOPY eSP (ACF110) CBS ISS (CBT) 2017(H)	2018(J)	No. Seri	Kode Parts Catalog
1	28300-K81-N00	ARM ASSY., KICK STARTER	1	1		
2	35700-K93-N01	SWITCH ASSY., SIDE STAND	1	1		
3	50500-K93-N00	STAND COMP., MAIN	1	1		
4	50503-KZL-930	SHAFT, MAIN STAND	1	1		
5	50520-KVB-900	SPRING, MAIN STAND	1	1		
6	50530-K93-N00	BAR COMP., SIDE STAND	1	1		
7	90108-MK6-670	BOLT, SIDE STAND PIVOT	1	1		
8	90147-KVB-900	BOLT, SPECIAL, 6X16	1	1		
9	90203-KVB-900	NUT, SIDE STAND	1	1		
10	94101-10800	WASHER, PLAIN, 10MM	1	1		
11	94201-30200	PIN, SPLIT, 3.0X20	1	1		
12	95011-61000	RUBBER A, STAND STOPPER	1	1		
13	95014-72102	SPRING A, SIDE STAND	1	1		
14	95701-08025-07	BOLT, FLANGE, 8X25	1	1		

F-36 REAR CUSHION

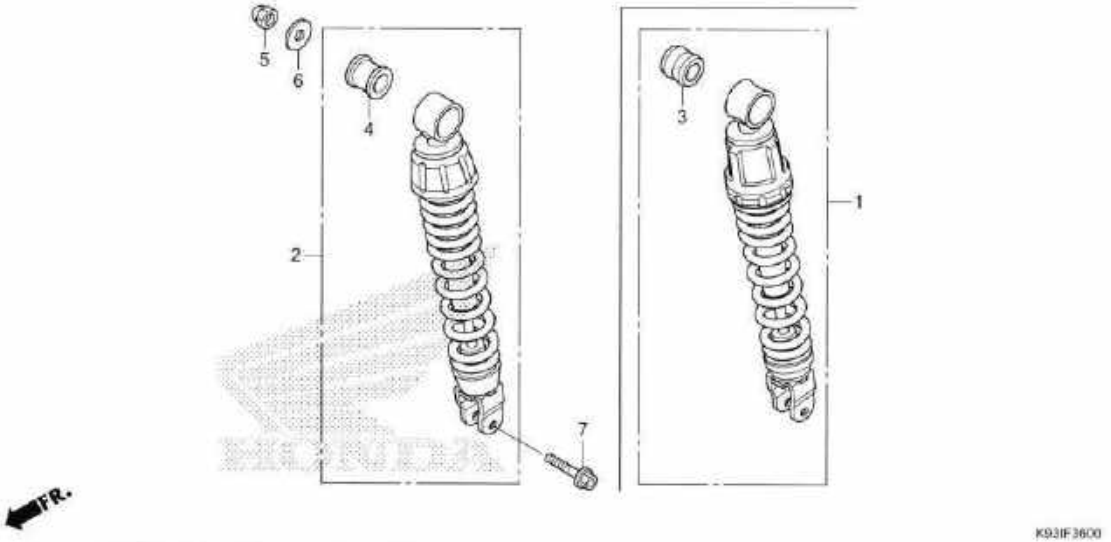

No. Ref.	L.O.N.	(Nomor ref. relatif) Deskripsi	F.R.T.
2		(1)	
	512115	CUSHION ASSY., REAR.....	0,5

No. Ref.	No. Part	Deskripsi	Jumlah SCOOPY-i6P (ACF110) CBS ISS (CBT) 2017(H)	2018(J)	No. Seri		Kode Parts Catalog
1	52400-K93-N02	CUSHION ASSY., RR.	1	1	--------	--------	IN
2	52400-K93-N11	CUSHION ASSY., RR.	1	1	--------	--------	2IN,3IN
3	52485-K81-N11	BUSH, RUBBER	1	1	--------	--------	IN
4	52485-KVY-901	BUSH, RUBBER	1	1	--------	--------	2IN,3IN
5	94021-10000-0S	NUT, CAP, 10MM	1	1			
6	94101-10000	WASHER, PLAIN, 10MM	1	1			
7	95801-08032-00	BOLT, FLANGE, 8X32	1	1			

F-37 WINKER

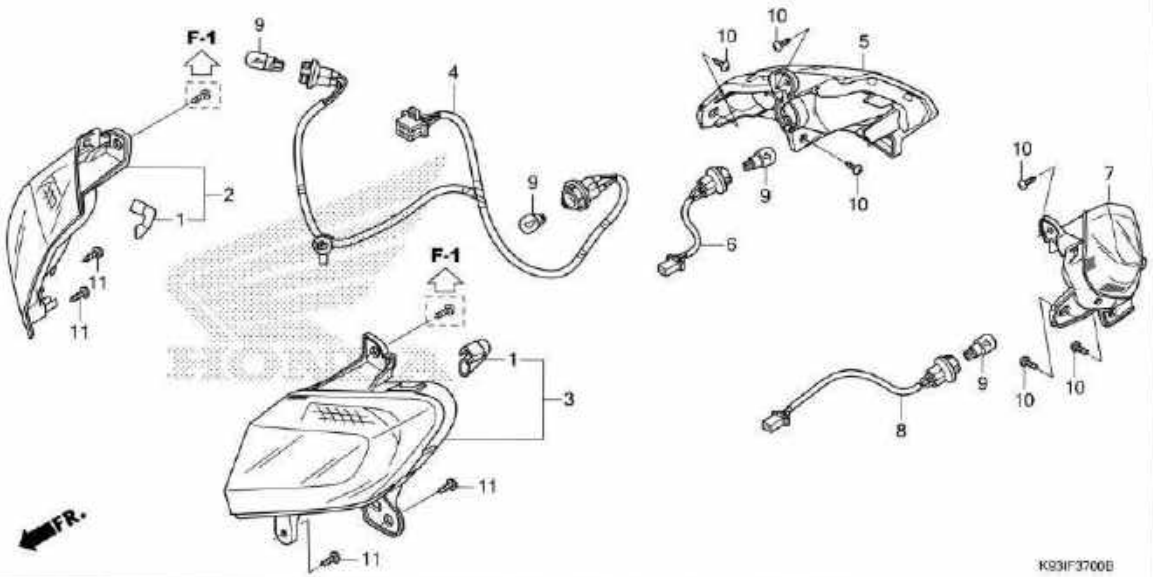

No. Ref.	L.O.N.	(Nomor ref. relatif) Deskripsi	F.R.T.
2	6161C4	WINKER :RIGHT FRONT.....	0,3
3	6161C3	WINKER :LEFT FRONT.....	0,3
	6161C5	WINKER :KEDUA-DUANYA FRONT.....	0,3
4	6161AA	SOCKET, WINKER :FRONT.....	0,2
5	6161C7	WINKER :RIGHT REAR.....	0,2
6	6161R9	SOCKET, WINKER :RIGHT REAR.....	0,1
7	6161C6	WINKER :LEFT REAR.....	0,2
	6161C8	WINKER :KEDUA-DUANYA REAR.....	0,3
8	6161R8	SOCKET, WINKER :LEFT REAR.....	0,1
	6161S0	SOCKET, WINKER :KEDUA-DUANYA REAR	0,1
9	616133	BULB, WINKER :FRONT.....	0,1
		.CATATAN: Waktu sama untuk dua unit	
	616139	BULB, WINKER :REAR.....	0,1
		.CATATAN: Waktu sama untuk dua unit	
	616160	BULB, WINKER :UNTUK 1 KENDARAAN	0,2

No. Ref.	No. Part	Deskripsi	Jumlah SCOOPY eSP (ACF110) CBS ISS (CBT) 2017(H)	2018(J)	No. Seri	Kode Parts Catalog
1	33113-K20-901	PIPE, CP.....	2	2		
2	33410-K93-N01	WINKER COMP., R. FR.....	1	1		
3	33420-K93-N01	WINKER COMP., L. FR.....	1	1		
4	33462-K93-N01	SOCKET COMP., WINKER.....	1	1		
5	33602-K93-N01	WINKER COMP., R. RR.....	1	1		
6	33607-K93-N01	SOCKET COMP., R. RR. WINKER.	1	1		
7	33652-K93-N01	WINKER COMP., L. RR.	1	1		
8	33657-K93-N01	SOCKET COMP., L. RR. WINKER.	1	1		
9	34904-K12-901	BULB, WINKER LIGHT(12V 10W) (AMBER)	4	4		
10	93903-34310	SCREW, TAPPING, 4X12.....	6	6		
11	93903-35310	SCREW, TAPPING, 5X16.....	4	4		

3

F-38 TAILLIGHT

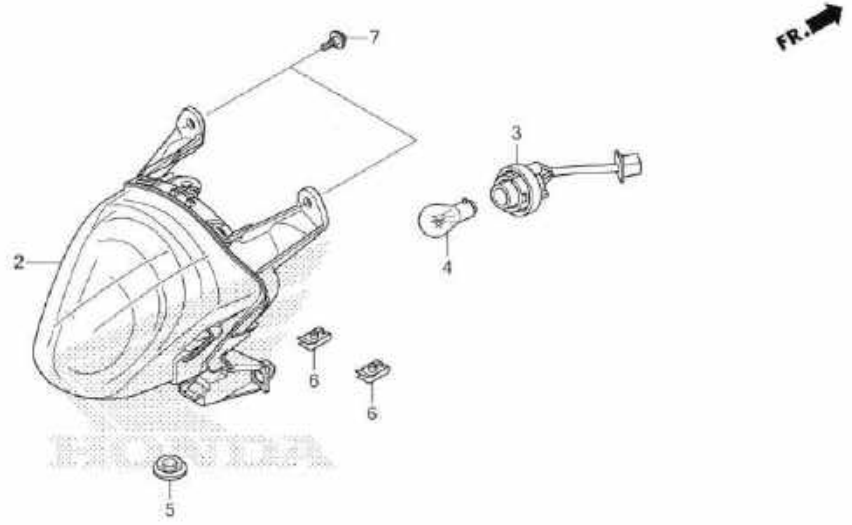

No. Ref.	L.O.N.	(Nomor ref. relatif) Deskripsi	F.R.T.
2	6161D5	TAILLIGHT UNIT.....	0,5
3	6161E7	SOCKET, TAILLIGHT.....	0,1
4	6161G1	BULB, TAILLIGHT.....	0,1

No. Ref.	No. Part	Deskripsi	Jumlah SCOOPY-i/SP (NCF110) CBS ISS (CBT) 2017(M)	2018(J)	No. Seri	Kode Parts Catalog
2	33710-K93-N01	TAILLIGHT UNIT(STANLEY)	1	1		
3	33750-K93-N01	SOCKET COMP., TAILLIGHT	1	1		
4	34906-KWN-711	BULB, STOP & TAILLIGHT (12V 21/5W)	1	1		
5	83601-MN5-000	GROMMET, SIDE COVER	1	1		
6	90677-KAN-T00	NUT, CLIP, 5MM	2	2		
7	91509-GE2-760	SCREW, PAN, 5X11.5	2	2		

F-39 REAR FENDER

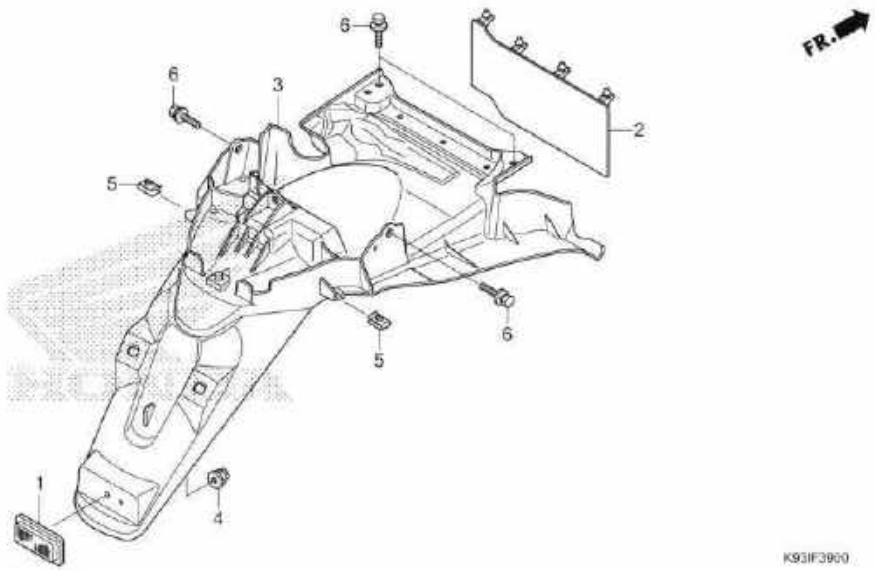

No. Ref.	L.O.N.	(Nomor ref. relatif) Deskripsi	F.R.T.
3	413102	FENDER, REAR.....	0,6

No. Ref.	No. Part	Deskripsi	Jumlah SCOOPY eSP (ACF110) CBS ISS (CBT) 2017(H)	2018(J)	No. Seri	Kode Parts Catalog
1	33741-MS6-921	REFLECTOR, REFLEX.....	1	1		
2	80104-K93-N00	GUARD, RR. SPLASH.....	1	1		
3	80105-K93-N00	FENDER, RR.....	1	1		
4	90301-KWN-901	NUT, U, 5MM.....	1	1		
5	90677-KAN-T00	NUT, CLIP, 5MM.....	2	2		
6	93404-06012-00	BOLT-WASHER, 6X12.....	4	4		

3

F-40 BATTERY

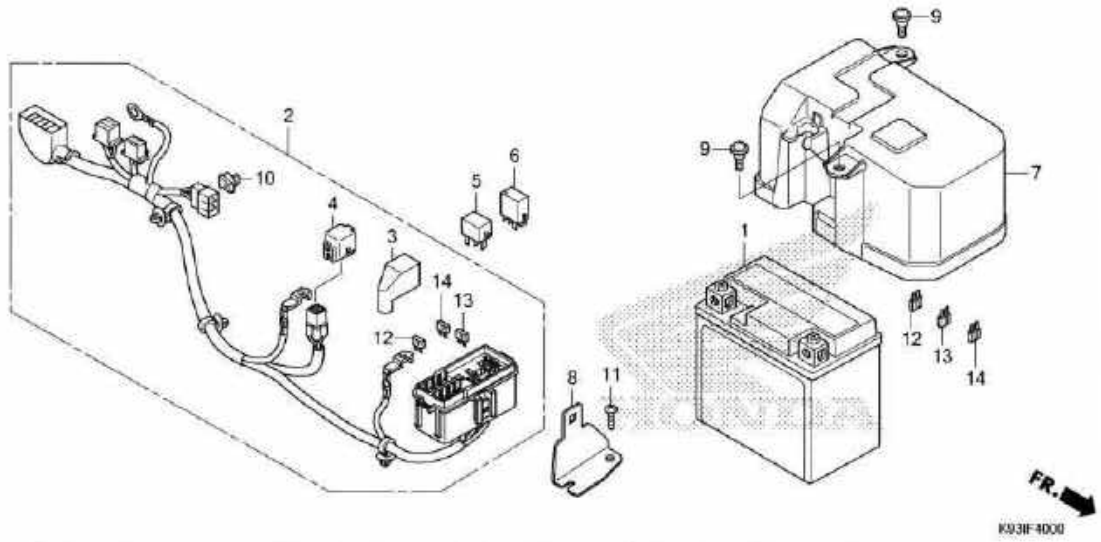

No. Ref.	L.O.N.	(Nomor ref. relatif) Deskripsi	F.R.T.
1	610100	BATTERY	0,2
2	6111F8	SUB HARNESS, BATTERY	1,1
5	611155	RELAY, MAIN	0,2
6	6111C5	RELAY, STARTER	0,2
7	6101A1	COVER, BATTERY	0,1

No. Ref.	No. Part	Deskripsi	Jumlah SCOOPY eSP (ACF110) CBS ISS (CBT) 2017(H)	2018(J)	No. Seri	Kode Parts Catalog
1	31500-KZR-601	BATTERY(YTZ6V)(GS YUASA)	1	1		
	31500-KZR-602	BATTERY(GTZ6V)(GS YUASA)	1	1		
2	32102-K93-N00	SUB HARNESS, BATTERY	1	1		
3	32413-KGH-900	COVER, BATTERY TERMINAL	1	1		
4	32606-GEV-761	CAP, DUMMY(4P)(RED)	1	1		
5	38501-KVZ-631	RELAY ASSY., POWER (MICRO ISO 4P)(MI)	1	1		
	38501-KWN-901	RELAY COMP., POWER (MICRO ISO 4P)(OM)	1	1		
6	38502-GGZ-J01	RELAY COMP., POWER (MICRO ISO 5P)(MI)	1	1		
	38502-K81-N01	RELAY COMP., POWER (MICRO ISO 5P)(OM)	1	1		
7	80110-K93-N00	COVER, BATTERY	1	1		
8	80111-K50-T00	STAY, FUSE BOX	1	1		
9	91509-GE2-760	SCREW, PAN, 5X11.5	2	2		
10	91580-SM4-003	CLIP, COUPLER(ORANGE)	1	1		
11	93903-34410	SCREW, TAPPING, 4X16	1	1		
12	98200-40500	FUSE, MINI(5A)	5	5		
13	98200-41000	FUSE, MINI(10A)	3	3		
14	98200-42500	FUSE, MINI(25A)	2	2		

F-41 WIRE HARNESS

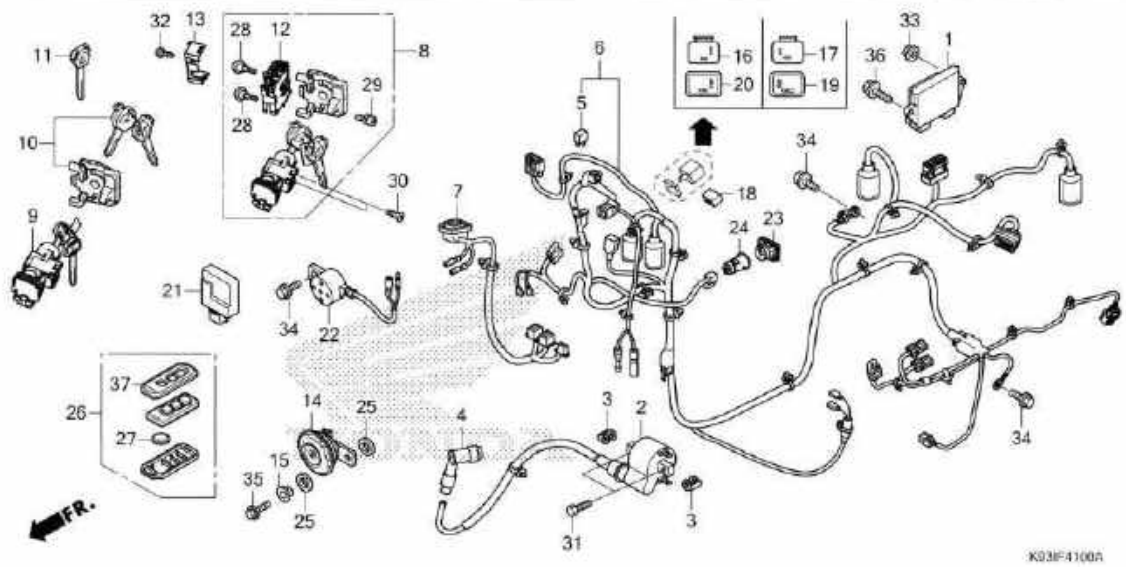

No. Ref.	L.O.N.	(Nomor ref. relatif) Deskripsi	F.R.T.
1	618135	ENGINE CONTROL MODULE(ECM).....	0,6
2	6141D5	COIL, IGNITION.....	0,4
4	6141E3	CAP, NOISE SUPPRESSOR.....	0,3
5	6131B3	RECTIFIER, SILICON.....	0,2
6	611100	HARNESS, WIRE.....	1,2
7	611142	SUB HARNESS, ENGINE.....	0,5
8	6151A1	KEY SET.....	1,7
9	615145	SWITCH, COMBINATION & LOCK.....	1,7
10	6151A2	KEY, SHUTTER.....	1,6
		.TIDAK TERMASUK: Key cutting	
12	6151E8	SWITCH, SEAT AND BOX.....	0,4
14	616169	HORN.....	0,1
16		(17)	
	6111C3	RELAY, WINKER.....	0,2
21	6181C8	CONTROL UNIT, ANSWER BACK.....	0,2
22	6161AB	BUZZER, ELECTRON.....	0,3
24	8121A0	SOCKET, ACCESSORY.....	0,6

No. Ref.	No. Part	Deskripsi	Jumlah SCOOPY eSP (ACF110) CBS ISS (CBT) 2017(H)	2018(J)	No. Seri	Kode Parts Catalog
1	30400-K93-N01	CONTROL UNIT, ENGINE	1	1		
2	30510-K93-N01	COIL COMP., IGNITION	1	1		
3	30520-GFM-900	SPACER, IGNITION COIL	2	2		
4	30700-K81-N01	CAP ASSY., NOISE SUPPRESSOR (TO)	1	1		
	30700-K81-N11	CAP ASSY., NOISE SUPPRESSOR (NG)	1	1		
5	31700-124-008	RECTIFIER ASSY., SILICON	1	1		
6	32100-K93-N00	HARNESS, WIRE	1	1		
7	32101-K93-N00	SUB HARNESS, SPEEDOMETER	1	1		
8	35010-K93-N00	KEY SET	1	1		
9	35101-K46-N01	SWITCH ASSY., COMBINATION & LOCK	1	1		
10	35110-K46-N01	SHUTTER, KEY	1	1		
11	35121-K46-N00	KEY, BLANK ..... (NOTAGTOP2REPORDER)	(1)	(1)		
12	35190-K46-N02	SWITCH ASSY., SEAT OPENER ...	1	1		
13	35191-K27-V01	COVER, CABLE	1	1		
14	38110-K93-N01	HORN COMP.	1	1		
15	38112-KZL-A00	COLLAR, HORN SETTING	1	1		
16	38301-KPH-881	RELAY COMP., WINKER	1	1		
17	38301-KZR-C01	RELAY COMP., WINKER	1	1		
18	38306-K16-901	SUSPENSION, WINKER RELAY(DS)	1	1		
	38306-KK4-000	SUSPENSION, WINKER RELAY(MI)	1	1		
19	38307-K16-901	COVER, SEAL	1	1		
20	38307-K93-N01	COVER, SEAL	1	1		

F-41 WIRE HARNESS

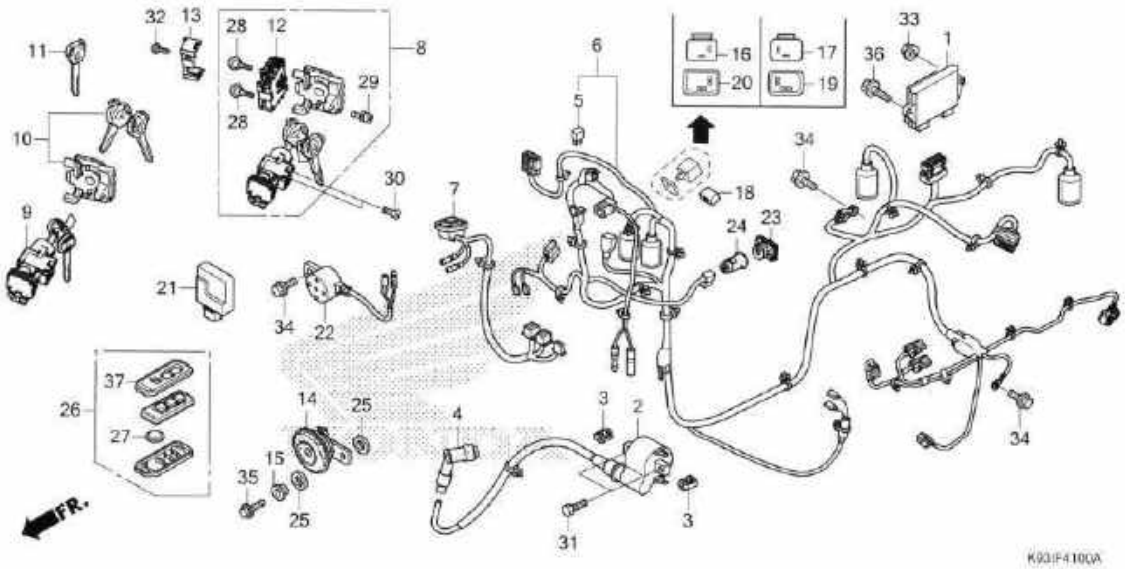

No. Ref.	No. Part	Deskripsi	Jumlah SCOOPY eSP (ACF110) CBS ISS (CBT) 2017(H)	2018(J)	No. Seri	Kode Parts Catalog
21	38410-K93-N01	CONTROL UNIT, ALARM & ANSWER BACK	1	1		
22	38720-K66-V11	BUZZER ASSY.	1	1		
23	39602-K41-N21	CAP ASSY.	1	1		
24	39624-K41-N21	SOCKET ASSY.	1	1		
25	61106-KW6-840	RUBBER B, MOUNTING	2	2		
26	72147-K93-N02	TRANSMITTER ASSY., ALARM & ANSWER	1	1		
27	72148-TY0-000	BATTERY COMP.(CR1632)	1	1		
28	90101-MT4-000	SCREW, SCREEN SETTING	2	2		
29	90111-MR5-000	BOLT, SOCKET, 5X9	1	1		
30	90164-KZL-A00	SCREW, U-LOCK FLAT, 6X12	2	2		
31	92101-06020-4J	BOLT, HEX., 6X20	2	2		
32	93901-24320	SCREW, TAPPING, 4X12	1	1		
33	94050-06000	NUT, FLANGE, 6MM	1	1		
34	95701-06012-00	BOLT, FLANGE, 6X12	3	3		
35	95701-06016-00	BOLT, FLANGE, 6X16	1	1		
36	95701-06020-00	BOLT, FLANGE, 6X20	1	1		
37	72146-K93-N01	CASE, UPPER	1	1		

F-42 FRAME BODY

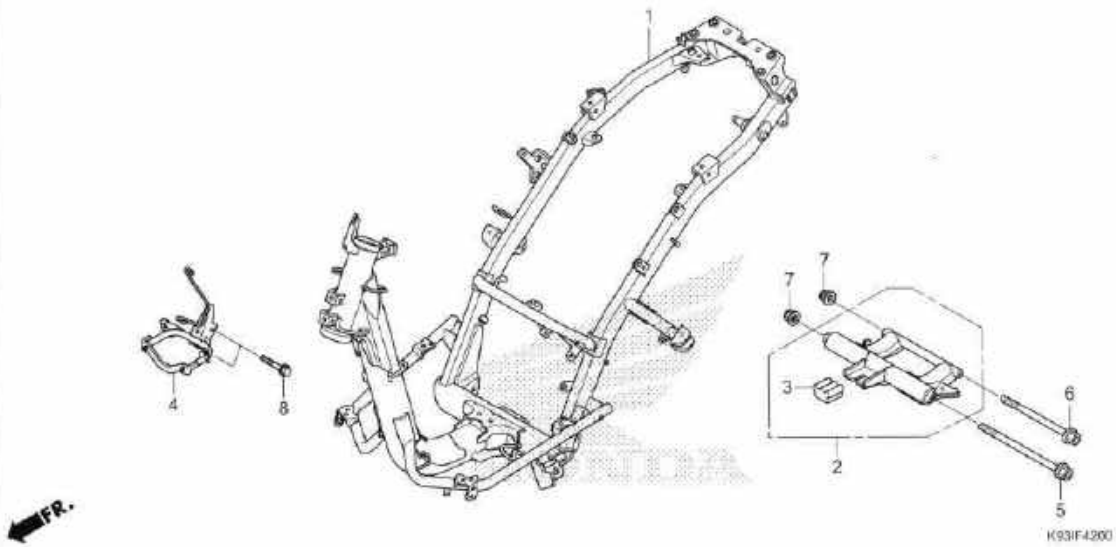

No. Ref.	L.O.N.	(Nomor ref. relatif) Deskripsi	F.R.T.
1	410100	BODY, FRAME.....	5,3
		.TERMASUK: Penurunan dan pemasangan mesin	
2	410185	LINK, ENGINE HANGER.....	1,6
		.TERMASUK: Penurunan dan pemasangan mesin	
4	411105	STAY, FRONT COVER.....	0,5

No. Ref.	No. Part	Deskripsi	Jumlah SCOOPY eSP (ACF110) CBS 125S (CBT) 2017(H)	2018(J)	No. Seri	Kode Parts Catalog
1	50100-K93-N00	BODY COMP., FRAME	1	1		
2	50350-K81-N00	LINK ASSY., ENGINE HANGER ...	1	1		
3	50352-K59-A10	RUBBER, LINK STOPPER	1	1		
4	64223-K93-N00	STAY, FR. COVER	1	1		
5	90105-KVY-900	BOLT, FLANGE, 10X270	1	1		
6	90106-GCC-000	BOLT, FLANGE, 10X238	1	1		
7	90304-KGH-901	NUT, U, 10MM	2	2		
8	95801-08032-00	BOLT, FLANGE, 8X32	2	2		

F-46 TOOL

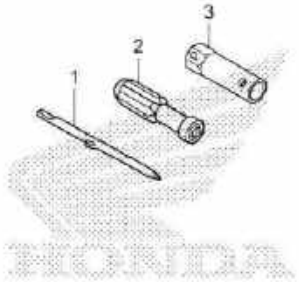

K93IF4000

No. Ref.	L.O.N.	(Nomor ref. relatif) Deskripsi	F.R.T.
		TIDAK ADA INFORMASI	

No. Ref.	No. Part	Deskripsi	Jumlah SCOOPY-i6P (ACF110) CBS ISS (CBT) 2017	2018	No. Seri	Kode Parts Catalog
1	89102-538-000	DRIVER, SCREW(NO.2 + -)	1	1		
2	89103-538-000	GRIP	1	1		
3	89216-KVY-960	WRENCH, SPARK PLUG	1	1		

F-47 CAUTION LABEL

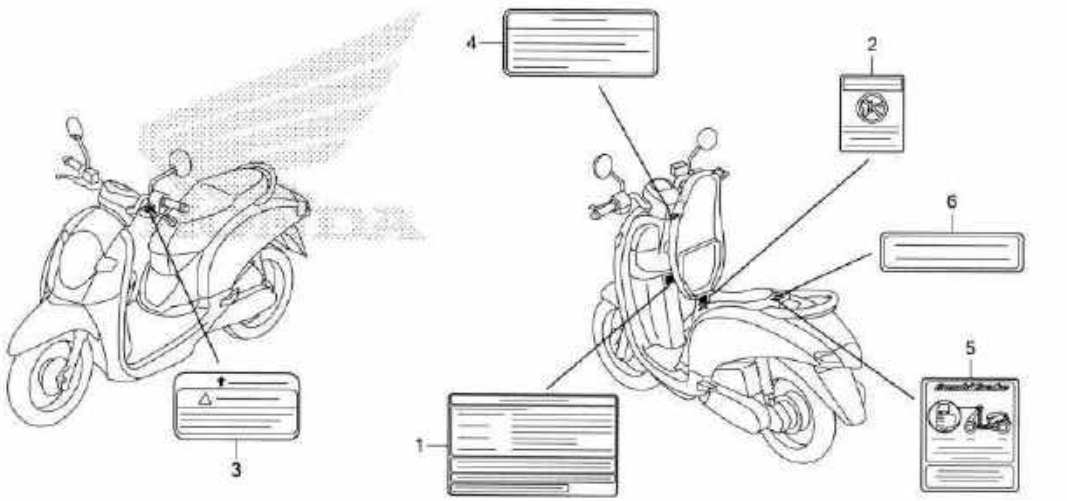

No. Ref.	L.O.N.	(Nomor ref. relatif) Deskripsi	F.R.T.
		TIDAK ADA INFORMASI	

No. Ref.	No. Part	Deskripsi	Jumlah SCOOPY eSP (ACF110) CBS ISS (CST) 2017(H)	2018(J)	No. Seri	Kode Parts Catalog
1	87505-K93-N00	LABEL, TIRE	1	1		
2	87509-KWW-A40	LABEL, AIR CLEANER ELEMENT NOTICE	1	1		
3	87514-K81-N30	LABEL, CBS CAUTION	1	1		
4	87560-KVB-930	LABEL, DRIVE CAUTION	1	1		
5	87563-K59-A10	STICKER, COMBI BRAKE	1	1		
6	87586-KVB-930	LABEL, FUEL	1	1		

3

F-48 MARK(ACF110CBTH-IN)

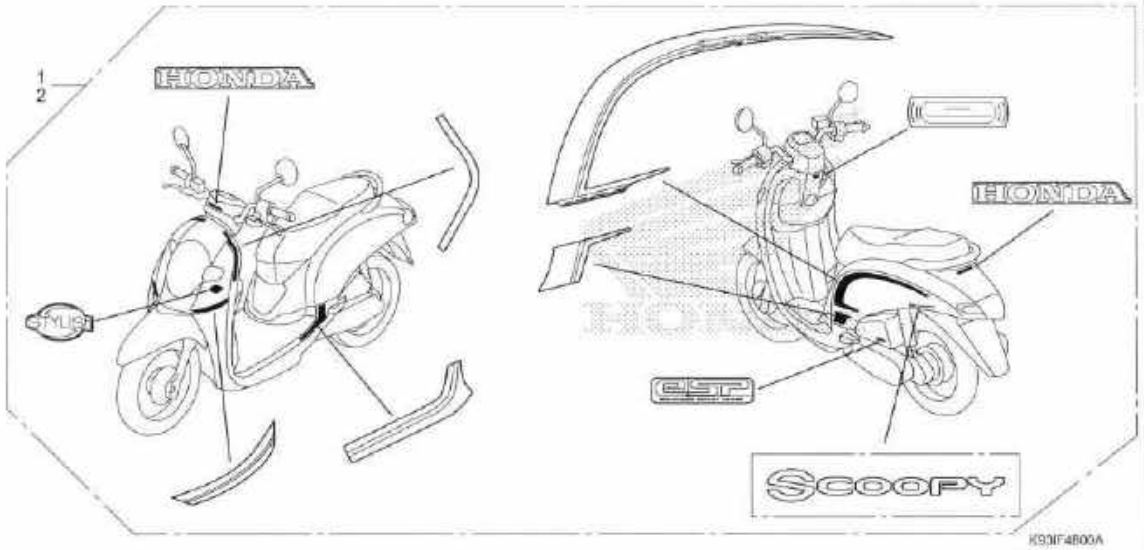

No. Ref.	L.O.N.	(Nomor ref. relatif) Deskripsi	F.R.T.
		TIDAK ADA INFORMASI	

No. Ref.	No. Part	Deskripsi	Jumlah SCOOPY eSP (ACF110) CBS ISS (CBT) 2017(-) 2018(-)		No. Seri			Kode Parts Catalog
1	871X0-K93-N00ZAL	STRIPE SET, L. BLACK SILVER.....	1	-	--------	--------	IN	
	871X0-K93-N00ZBL	BROWN SILVER.....	1	-	--------	--------	IN	
2	871X0-K93-N00ZAR	STRIPE SET, R. BLACK SILVER.....	1	-	--------	--------	IN	
	871X0-K93-N00ZBR	BROWN SILVER.....	1	-	--------	--------	IN	

F-48-1 MARK(ACF110CBTH-2IN)

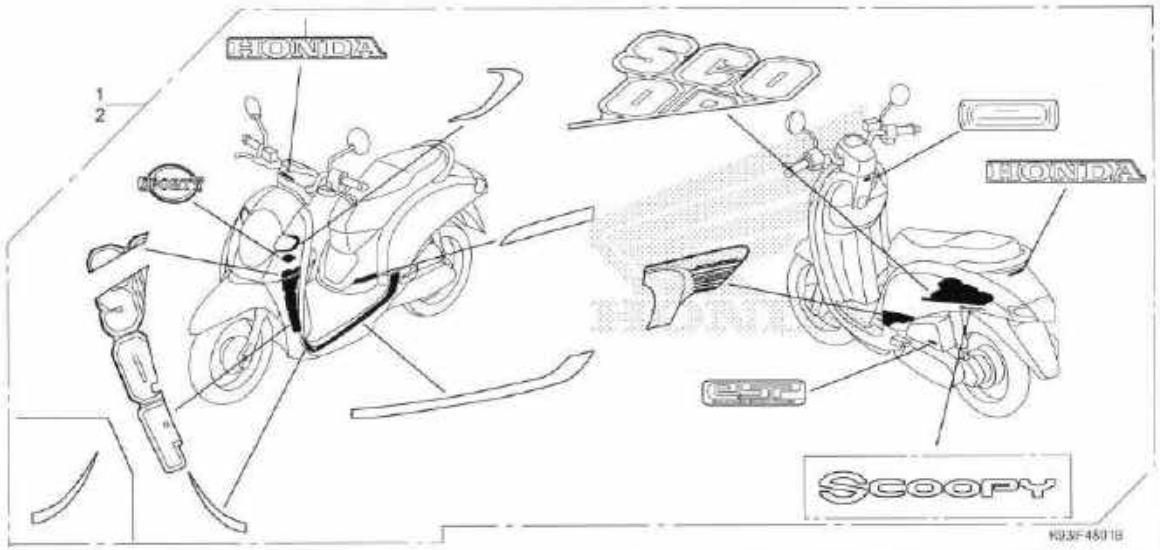

No. Ref.	L.O.N.	(Nomor ref. relatif) Deskripsi	F.R.T.
		TIDAK ADA INFORMASI	

No. Ref.	No. Part	Deskripsi	Jumlah SCOOPY eSP (ACF110) CBS ISS (CBT) 2017-(H) 2016-(J)		No. Seri		Kode Parts Catalog
1	871X0-K93-N10ZAL	STRIPE SET, L BLACK WHITE	1	-	--------	--------	2IN
	871X0-K93-N10ZBL	RED BLACK.....	1	-	--------	--------	2IN
	871X0-K93-N10ZCL	WHITE BLACK.....	1	-	--------	--------	2IN
2	871X0-K93-N10ZAR	STRIPE SET, R BLACK WHITE.....	1	-	--------	--------	2IN
	871X0-K93-N10ZBR	RED BLACK.....	1	-	--------	--------	2IN
	871X0-K93-N10ZCR	WHITE BLACK.....	1	-	--------	--------	2IN

3

F-48-2 MARK(ACF110CBTH-3IN)

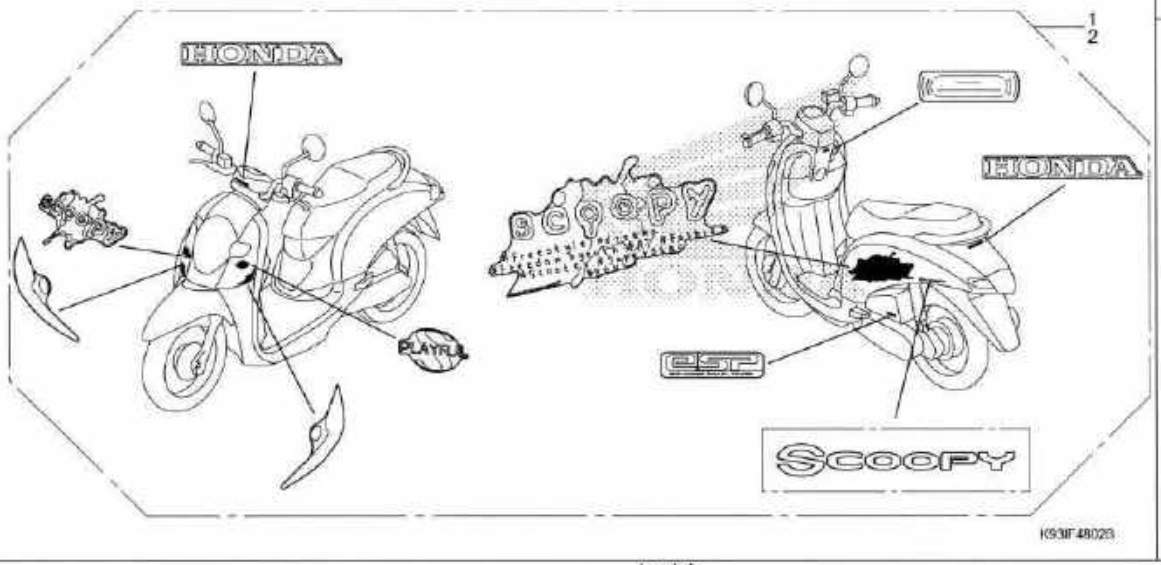

No. Ref.	L.O.N.	(Nomor ref. relatif) Deskripsi	F.R.T.
		TIDAK ADA INFORMASI	

No. Ref.	No. Part	Deskripsi	Jumlah SCOOPY eSP(ACF110) CBS ISS (CBT) 2017(H)	2018(J)	No. Seri		Kode Parts Catalog
1	871X0-K93-N20ZAL	STRIPE SET, L					
		CREAM SILVER.....	1	-	--------	--------	3IN
	871X0-K93-N20ZBL	WHITE BLUE.....	1	-	--------	--------	3IN
	871X0-K93-N20ZCL	WHITE GREEN.....	1	-	--------	--------	3IN
2	871X0-K93-N20ZAR	STRIPE SET, R					
		CREAM SILVER.....	1	-	--------	--------	3IN
	871X0-K93-N20ZBR	WHITE BLUE.....	1	-	--------	--------	3IN
	871X0-K93-N20ZCR	WHITE GREEN.....	1	-	--------	--------	3IN

F-48-3 MARK(ACF110CBTJ-IN)

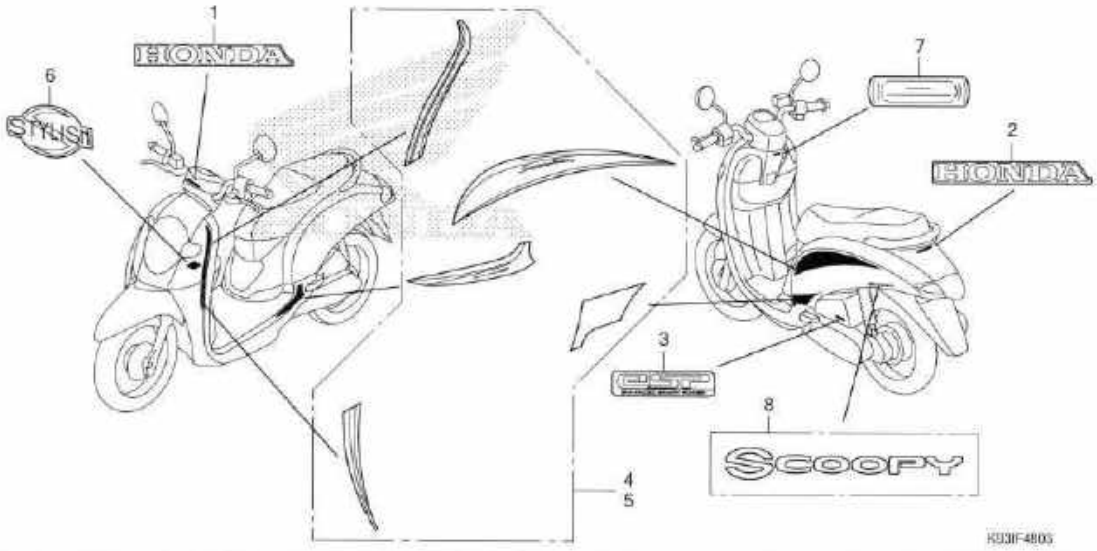

No. Ref.	L.O.N.	(Nomor ref. relatif) Deskripsi	F.R.T.
		TIDAK ADA INFORMASI	

No. Ref.	No. Part	Deskripsi	Jumlah SCOOPY eSP (ACF110) CBG ISS (CBT) 2017(H) 2018(J)		No. Seri		Kode Parts Catalog
1	86101-K93-N00ZA	MARK, HONDA(65MM)					
		TYPE6.....	-	1	--------	--------	IN
	86101-K93-N30ZA	*TYPE5*.....	-	1	--------	--------	IN
2	86101-K93-N30ZB	MARK, HONDA(65MM)					
		TYPE4.....	-	1	--------	--------	IN
	86101-K93-N30ZC	*TYPE3*.....	-	1	--------	--------	IN
	86101-K93-N30ZD	*TYPE2*.....	-	1	--------	--------	IN
	86101-K93-N30ZE	*TYPE1*.....	-	1	--------	--------	IN
3	86170-KZR-600	MARK, ENGINE	-	1	--------	--------	IN
4	871X0-K93-N30ZAL	STRIPE SET, L.					
		STYLISH WHITE.....	-	1	--------	--------	IN
	871X0-K93-N30ZBL	STYLISH RED.....	-	1	--------	--------	IN
	871X0-K93-N30ZCL	STYLISH BROWN.....	-	1	--------	--------	IN
	871X0-K93-N30ZDL	STYLISH BLACK.....	-	1	--------	--------	IN
5	871X0-K93-N30ZAR	STRIPE SET, R.					
		STYLISH WHITE.....	-	1	--------	--------	IN
	871X0-K93-N30ZBR	STYLISH RED.....	-	1	--------	--------	IN
	871X0-K93-N30ZCR	STYLISH BROWN.....	-	1	--------	--------	IN
	871X0-K93-N30ZDR	STYLISH BLACK.....	-	1	--------	--------	IN
6	86649-K93-N30ZA	MARK(STYLISH)					
		TYPE4.....	-	1	--------	--------	IN
	86649-K93-N30ZB	*TYPE3*.....	-	1	--------	--------	IN
	86649-K93-N30ZC	*TYPE2*.....	-	1	--------	--------	IN
	86649-K93-N30ZD	*TYPE1*.....	-	1	--------	--------	IN
7	86811-K93-N00ZA	MARK, ALARM SYSTEM					
		TYPE1.....	-	1	--------	--------	IN
8	86836-K93-N00ZA	MARK(SCOOPY)					
		TYPE1.....	-	2	--------	--------	IN

3

F-48-4 MARK(ACF110CBTJ-2IN)

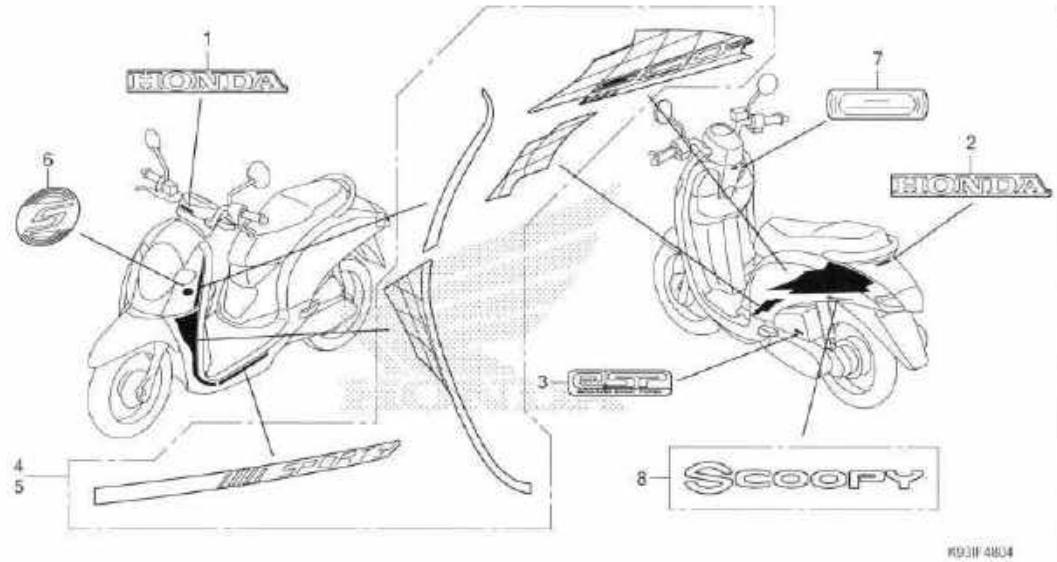

No. Ref.	L.O.N.	(Nomor ref. relatif) Deskripsi	F.R.T.
		TIDAK ADA INFORMASI	

No. Ref.	No. Part	Deskripsi	Jumlah SCOOPY eSP (ACF110) CBS ISS (CBT) 2017(H)	2018(J)	No. Seri		Kode Parts Catalog
1	86101-K93-N00ZE	MARK, HONDA(65MM)					
		TYPE2.....	-	1	--------	--------	2IN
2	86101-K93-N00ZE	MARK, HONDA(65MM)					
		TYPE2.....	-	1	--------	--------	2IN
3	86170-KZR-600	MARK, ENGINE	-	1	--------	--------	2IN
4	871X0-K93-N40ZAL	STRIPE SET, L.					
		SPORTY WHITE.....	-	1	--------	--------	2IN
	871X0-K93-N40ZBL	SPORTY RED.....	-	1	--------	--------	2IN
	871X0-K93-N40ZCL	SPORTY BLACK.....	-	1	--------	--------	2IN
5	871X0-K93-N40ZAR	STRIPE SET, R.					
		SPORTY WHITE.....	-	1	--------	--------	2IN
	871X0-K93-N40ZBR	SPORTY RED.....	-	1	--------	--------	2IN
	871X0-K93-N40ZCR	SPORTY BLACK.....	-	1	--------	--------	2IN
6	86649-K93-N40ZA	MARK(SPORTY)					
		TYPE3.....	-	1	--------	--------	2IN
	86649-K93-N40ZB	*TYPE2*.....	-	1	--------	--------	2IN
	86649-K93-N40ZC	*TYPE1*.....	-	1	--------	--------	2IN
7	86811-K93-N00ZA	MARK, ALARM SYSTEM					
		TYPE1.....	-	1	--------	--------	2IN
8	86836-K93-N00ZA	MARK(SCOOPY)					
		TYPE1.....	-	2	--------	--------	2IN

INDEKS NOMOR PART

Nomor Part	No. Blok	Ref
(00000)		
06430-KWN-900	F-22-30	1
06430-KZL-930	F-22-30	1
06451-961-405	F-18	1
06455-K46-N21	F-18	2
06530-GBG-B20	F-10	1
06531-GBG-B20	F-10	2
(10000)		
11100-K25-600	E-19-10	1
11103-KVB-901	E-19-10	2
	E-19-20	1
11103-KVB-930	E-19-10	2
	E-19-20	1
11108-KZL-930	E-17-10	1
11200-K44-V00	E-19-20	2
11203-K35-J00	E-19-20	3
11203-KVB-901	E-19-20	3
11204-KGF-900	E-17-10	2
11205-GBC-300	E-19-10	3
	E-19-20	4
11211-K50-T00	E-17-10	3
11216-GGC-900	E-k19-10	2
	E-19-20	1
11230-KVB-900	E-13	1
11340-K25-600	E-13	2
11342-KZL-930	E-13	3
11343-KVG-900	E-13	4
11361-K44-V00	E-19-10	4
11395-K44-V00	E-13	5
12100-K25-600	E-6	1
12191-K44-V00	E-6	2
12200-K81-N00	E-3	1
12204-K46-305	E-3	2
12204-KVY-305	E-3	2
12206-KPL-900	E-3	3
12209-GB4-681	E-4	1
12209-GB4-682	E-4	1
12251-GGC-901	E-3	4
12252-K25-600	E-3	4
12310-K44-V00	E-2	1
12361-035-000	E-19-20	5
12391-K25-601	E-2	2
12391-K44-V00	E-2	2
13000-K44-J00	E-20	1
13011-K81-N00	E-20	2
13011-K93-N00	E-20	2
13021-K81-N00	E-20	2
13021-K93-N00	E-20	2
13031-K81-N00	E-20	2
13031-K93-N00	E-20	2
13041-K81-N00	E-20	2
13041-K93-N00	E-20	2
13051-K81-N00	E-20	2
13051-K93-N00	E-20	2

Nomor Part	No. Blok	Ref
13101-K81-P00	E-20	3
13102-K81-P00	E-20	3
13103-K81-P00	E-20	3
13104-K81-P00	E-20	3
13105-K81-P00	E-20	3
13111-KWN-900	E-20	4
13115-GN5-910	E-20	5
14100-K50-T00	E-4	2
14321-KZL-E00	E-4	3
14401-K46-N21	E-5	1
14401-KVB-901	E-5	1
14430-K93-N00	E-4	4
14440-K93-N00	E-4	5
14451-KYY-900	E-4	6
14452-KYY-900	E-4	7
14510-KVB-900	E-5	2
14520-GFC-771	E-5	3
14520-K25-901	E-5	3
14520-K46-N21	E-5	3
14531-KVY-900	E-5	4
14560-KCW-851	E-5	5
14611-K44-V00	E-5	6
14711-K81-N00	E-4	8
14721-K81-N00	E-4	9
14751-KWP-900	E-4	10
14771-K93-N00	E-4	11
14775-KVY-900	E-4	12
14781-MA6-000	E-4	13
15100-KVB-900	E-11	1
15133-KVY-900	E-11	2
15135-KVY-900	E-11	3
15331-KVB-900	E-11	4
15332-KVB-900	E-11	5
15421-107-000	E-19-20	6
15421-KPL-900	E-19-20	6
15426-KVB-900	E-19-20	7
15651-KZL-930	E-19-10	5
15771-KV6-000	F-28	1
16016-K03-H11	E-22	1
16075-K25-901	E-22	2
16077-KVB-S51	E-22	3
16081-KYJ-901	E-22	4
16169-K46-N21	E-22	5
16400-K81-N01	E-22	6
16410-K81-N01	E-22	7
16450-K03-N31	E-22	8
16472-KPC-D50	E-22	9
16480-KVB-S51	E-22	10
16485-GGZ-J01	E-22	11
16700-K81-N01	F-26	1
16706-KVB-S51	F-26	2
16707-KZR-601	F-26	3
17111-K81-N00	E-22	12
17119-GGC-900	E-22	13
17208-GFM-970	F-28	2

Nomor Part	No. Blok	Ref
17210-K93-N00	F-28	3
17213-K16-900	F-28	4
17218-K50-T00	F-28	5
17225-K93-N00	F-28	6
17235-K46-N20	F-28	7
17236-KVB-900	F-28	8
17253-K50-T00	F-28	9
17366-428-670	F-28	10
17370-382-870	F-28	11
17505-K81-N00	F-26	4
17510-K81-N00	F-26	5
17517-GGL-J00	F-26	6
17518-GHB-601	F-26	7
17518-GHB-602	F-26	7
17518-GHB-603	F-26	7
17525-KBN-900	F-26	8
17526-K59-A10	F-26	9
17528-K93-N01	F-26	10
17560-K44-V00	E-22	14
17572-GHB-601	F-26	11
17572-GHB-602	F-26	11
17575-K93-N00	F-26	12
17620-KGH-600	F-26	13
17631-KEV-900	F-26	14
17910-K81-N31	F-4-10	1
17920-K81-N31	F-4-10	2
17925-K50-T00	F-4-10	3
18291-KVB-900	F-30	1
18300-K93-N00	F-30	2
18300-K93-N30	F-30	2
18316-K50-T00	F-30	3
18318-K93-N00ZK	F-30	4
19510-K44-V00	E-10	1
19610-K44-V00	E-1	1
19621-K81-N00	E-1	2
19625-K44-V00	E-1	3
19631-K50-T00	E-1	4
19639-GBC-000	E-1	5
19641-K44-V00	E-13	6
19642-K44-V00	E-13	7
19748-K44-V00	E-13	8
19749-KVY-900	E-13	9
(20000)		
21200-K50-T00	E-17-10	4
21395-KVB-901	E-17-10	5
22011-K81-N00	E-16	1
22011-K93-N00	E-16	1
22100-K81-N21	E-17	1
22102-K44-V00	E-16	2
22103-K44-V00	E-16	3
22105-K44-V00	E-16	4
22109-KZL-840	E-16	5
22110-K44-V00	E-16	6
22123-K44-V00	E-16	7

Nomor Part	No. Blok	Ref
22123-K81-N00	E-16	7
22131-KVB-900	E-16	8
22350-K16-A41	E-17	2
22361-K16-A41	E-17	3
22401-GCC-000	E-17	4
22535-K16-A40	E-17	5
22804-148-000	E-17	6
23100-K16-A41	E-17	7
23205-K93-N00	E-17	8
23224-K81-N20	E-17	9
23225-KSY-900	E-17	10
23226-K27-V02	E-17	11
23233-K16-A41	E-17	12
23237-K16-A41	E-17	13
23238-K16-A41	E-17	14
23411-K81-N00	E-17-10	6
23421-K81-N00	E-17-10	7
23422-K46-N20	E-17-10	8
23430-K81-N00	E-17-10	9
28223-KZL-840	E-16	9
28230-KZL-840	E-16	10
28250-KZR-600	E-16	11
28253-KVB-900	E-16	12
28255-GS6-000	E-16	13
28281-KZL-C00	E-16	14
28300-K81-N00	F-35	1
28333-300-000	F-14-10	1
(30000)		
30400-K93-N01	F-41	1
30510-K93-N01	F-41	2
30520-GFM-900	F-41	3
30700-K81-N01	F-41	4
30700-K81-N11	F-41	4
31210-K46-N21	E-10	2
31210-K61-601	E-10	2
31220-K93-N01	E-10	3
31500-KZR-601	F-40	1
31500-KZR-602	F-40	1
31700-124-008	F-41	5
31919-K25-601	E-3	5
31919-K25-602	E-3	5
32100-K93-N00	F-41	6
32101-K93-N00	F-41	7
32102-K93-N00	F-40	2
32107-K41-N00	F-12	1
32112-K50-T00	E-19-20	8
32413-KGH-900	F-40	3
32606-GEV-761	F-40	4
32961-K44-V00	E-10	4
32962-K81-N00	E-19-10	6
33101-K93-N00	F-1	1
33110-K93-N02	F-1	2
33113-K20-901	F-37	1
33114-KYT-900	F-1	3

INDEKS NOMOR PART

Nomor Part	No. Blok	Ref
33140-K93-N01	F-1	4
33410-K93-N01	F-37	2
33420-K93-N01	F-37	3
33462-K93-N01	F-37	4
33602-K93-N01	F-37	5
33607-K93-N01	F-37	6
33652-K93-N01	F-37	7
33657-K93-N01	F-37	8
33710-K93-N01	F-38	2
33715-GB0-900	E-1	6
33741-MS6-921	F-39	1
33750-K93-N01	F-38	3
34904-K12-901	F-37	9
34906-KWN-711	F-38	4
35010-K93-N00	F-41	8
35101-K46-N01	F-41	9
35110-K46-N01	F-41	10
35121-K46-N00	F-41	11
35160-K20-T21	F-4-10	4
35164-K93-N01ZB	F-4-10	5
35165-K93-N01ZA	F-4-10	6
35170-K93-N01	F-4-10	7
35180-K20-T21	F-4-10	8
35190-K46-N02	F-41	12
35190-KWN-901	F-4-10	9
35191-K27-V01	F-41	13
35200-K03-N31	F-4-10	10
35202-K16-A41ZC	F-4-10	11
35205-K93-N01ZA	F-4-10	12
35340-KPH-901	F-4-10	13
35340-KWB-601	F-5	1
35700-K93-N01	F-35	2
36532-K81-N01	E-3	6
37100-K93-N01	F-2	1
37210-K93-N01	F-2	2
37211-K93-N01	F-2	3
37212-K93-N01	F-2	4
37700-K48-A01	E-19-20	9
37750-K16-A21	E-3	7
37750-KPH-701	E-3	7
37800-K81-N01	F-26	15
38110-K93-N01	F-41	14
38112-KZL-A00	F-41	15
38301-KPH-881	F-41	16
38301-KZR-C01	F-41	17
38306-K16-901	F-41	18
38306-KK4-000	F-41	18
38307-K16-901	F-41	19
38307-K93-N01	F-41	20
38410-K93-N01	F-41	21
38501-KVZ-631	F-40	5
38501-KWN-901	F-40	5
38502-GGZ-J01	F-40	6
38502-K81-N01	F-40	6
38720-K66-V11	F-41	22

Nomor Part	No. Blok	Ref
39602-K41-N21	F-41	23
39624-K41-N21	F-41	24
(40000)		
42301-KFM-900	F-20-40	1
42620-KTR-700	F-20-40	2
42650-K93-N00ZA	F-22-30	2
42650-K93-N00ZB	F-22-30	2
42711-K93-N01	F-22-30	3
42753-GM9-743	F-20-40	3
42753-KJ9-005	F-22-30	4
42753-KWF-901	F-20-40	3
42753-KWP-E01	F-22-30	4
43141-KVB-900	F-22-30	5
43151-329-000	F-22-30	6
43352-568-003	F-18	3
43352-K81-N01	F-18	3
43353-461-771	F-18	4
43410-KVB-900	F-22-30	7
43440-K93-N01	F-4-10	14
43450-K93-N01	F-4-10	15
43455-KZL-930	F-4-10	16
43472-KVB-900	F-22-30	8
44311-KVB-910	F-20-40	4
44312-KZR-600	F-20-40	5
44650-K93-N00ZA	F-20-40	6
44650-K93-N00ZB	F-20-40	6
44711-K93-N01	F-20-40	7
45108-KVB-T01	F-18	5
45111-MAJ-G41	F-18	6
45126-K93-N01	F-5	2
45131-GZ0-006	F-18	7
45131-K81-N01	F-18	7
45132-166-016	F-18	8
45133-MA3-006	F-18	9
45150-K93-N01	F-18	10
45156-K50-T00	F-5	3
45157-KVB-T00	F-5	4
45190-KZL-A01	F-18	11
45215-KPH-951	F-18	12
45216-166-006	F-18	13
45218-KWB-601	F-18	14
45351-K81-N31	F-20-40	8
45351-K93-N01	F-20-40	8
45351-KVB-931	F-20-40	8
45351-KVB-S02	F-20-40	8
45500-K81-N31	F-5	5
45504-410-003	F-5	6
45512-MA6-006	F-5	7
45513-GW0-911	F-5	8
45517-K81-N30	F-4-10	17
	F-5	9
45520-GW0-911	F-5	10
45521-GW0-911	F-5	11
45530-K03-M61	F-5	12

Nomor Part	No. Blok	Ref
(50000)		
50100-K93-N00	F-42	1
50301-GN5-901	F-10	3
50302-GN5-900	F-10	4
50306-GN5-900	F-10	5
50350-K81-N00	F-42	2
50352-K59-A10	F-42	3
50410-K93-N00ZD	F-24	1
50410-K93-N00ZE	F-24	2
50500-K93-N00	F-35	3
50503-KZL-930	F-35	4
50520-KVB-900	F-35	5
50530-K93-N00	F-35	6
50718-KYT-900	F-14-10	2
50720-K16-900	F-14-10	3
50730-K16-900	F-14-10	4
51400-K81-N01	F-17	1
51400-K93-N02	F-17	1
51401-K93-N02	F-17	2
51401-KZR-601	F-17	2
51410-K93-N02	F-17	3
51410-KZL-A01	F-17	3
51411-KVG-901	F-17	4
51412-GN5-901	F-17	4
51412-KWB-601	F-17	5
51420-K81-N01	F-17	6
51420-K93-N02	F-17	6
51425-GN5-901	F-17	7
51425-K93-N02	F-17	7
51437-KVG-901	F-17	8
51437-KWB-601	F-17	8
51440-K93-N02	F-17	9
51442-K93-N02	F-17	10
51447-KVG-901	F-17	11
51454-K93-N02	F-17	12
51454-KEV-881	F-17	12
51456-K93-N02	F-17	13
51456-KPH-901	F-17	13
51466-065-901	F-17	11
51470-K81-N01	F-17	9
51490-K93-N02	F-17	14
51490-KGH-901	F-17	14
51500-K81-N01	F-17	15
51500-K93-N02	F-17	15
51520-K81-N01	F-17	16
51520-K93-N02	F-17	16
52400-K93-N02	F-36	1
52400-K93-N11	F-36	2
52485-K81-N11	F-36	3
52485-KVY-901	F-36	4
53100-K93-N00	F-9	1
53102-KVB-S00	F-9	2
53140-K44-V00	F-4-10	18
53166-KWB-600	F-4-10	19
53172-K81-N30	F-4-10	20

Nomor Part	No. Blok	Ref
53173-K81-N30	F-4-10	21
53175-K81-N31	F-5	13
53178-K81-N30	F-4-10	22
53184-K81-N30	F-4-10	23
53185-K81-N30	F-4-10	24
53186-K81-N30	F-4-10	25
53188-K81-N30	F-4-10	26
53198-GBL-870	F-5	14
53199-KVG-910	F-5	15
53205-K93-N00ZA	F-2	6
53205-K93-N00ZJ	F-2	6
53205-K93-N00ZK	F-2	6
53205-K93-N00ZL	F-2	6
53206-K93-N00ZG	F-2	5
53206-K93-N00ZH	F-2	5
53206-K93-N00ZJ	F-2	5
53206-K93-N00ZK	F-2	5
53206-K93-N00ZL	F-2	5
53206-K93-N00ZM	F-2	5
53206-K93-N00ZN	F-2	5
53207-K93-N00BLM	F-2	7
53207-K93-N00FMB	F-2	7
53207-K93-N00MJB	F-2	7
53207-K93-N00MSR	F-2	7
53207-K93-N00PFW	F-2	7
53207-K93-N00PVB	F-2	7
53207-K93-N00RSW	F-2	7
53207-K93-N00VSM	F-2	7
53211-GN5-900	F-10	6
53212-GN5-900	F-10	7
53214-GN5-900	F-10	8
53216-GN5-830	F-10	9
53219-K93-N00	F-10	10
53220-GN5-900	F-10	11
(60000)		
60180-K16-A20	F-12	2
61100-K93-N00ZA	F-11	1
61100-K93-N00ZK	F-11	1
61100-K93-N00ZL	F-11	1
61100-K93-N00ZM	F-11	1
61100-K93-N00ZN	F-11	1
61100-K93-N00ZP	F-11	1
61100-K93-N00ZQ	F-11	1
61106-KW6-840	F-41	25
61302-K93-N00	F-1	5
61303-K93-N00	F-1	6
61316-KCJ-661	F-12	3
64201-K93-N00ZG	F-12	4
64201-K93-N00ZH	F-12	4
64201-K93-N00ZJ	F-12	5
64201-K93-N00ZK	F-12	4
	F-12	5
64201-K93-N00ZL	F-12	5
64201-K93-N00ZM	F-12	5

INDEKS NOMOR PART

Nomor Part	No. Blok	Ref
64201-K93-N00ZN	F-12	4
64201-K93-N00ZP	F-12	4
64201-K93-N00ZQ	F-12	4
64202-K93-N00ZG	F-12	7
64202-K93-N00ZH	F-12	7
64202-K93-N00ZJ	F-12	6
64202-K93-N00ZK	F-12	6
	F-12	7
64202-K93-N00ZL	F-12	6
64202-K93-N00ZM	F-12	6
64202-K93-N00ZN	F-12	7
64202-K93-N00ZP	F-12	7
64202-K93-N00ZQ	F-12	7
64223-K93-N00	F-42	4
64301-K93-N00ZK	F-12	8
64301-K93-N00ZL	F-12	8
64301-K93-N00ZM	F-12	8
64301-K93-N00ZN	F-12	8
64301-K93-N00ZP	F-12	8
64301-K93-N00ZQ	F-12	8
64301-K93-N00ZR	F-12	8
64310-K93-N00ZB	F-14	1
64310-K93-N00ZC	F-14	1
64311-K93-N00	F-14	2
64312-K93-N00	F-14	3
64340-K93-N00ZB	F-14	4
64421-K93-N00ZG	F-14	5
64421-K93-N00ZH	F-14	5
64421-K93-N00ZJ	F-14	5
	F-14	6
64421-K93-N00ZK	F-14	5
64421-K93-N00ZL	F-14	6
64421-K93-N00ZM	F-14	6
64421-K93-N00ZN	F-14	5
64421-K93-N00ZP	F-14	5
64421-K93-N00ZQ	F-14	5
64431-K93-N00ZG	F-14	7
64431-K93-N00ZH	F-14	7
64431-K93-N00ZJ	F-14	7
	F-14	8
64431-K93-N00ZK	F-14	7
64431-K93-N00ZL	F-14	7
	F-14	8
64431-K93-N00ZM	F-14	8
64431-K93-N00ZQ	F-14	7
64431-K93-N00ZR	F-14	7
64460-K93-N00ZB	F-14	9
64460-K93-N00ZC	F-14	9
(70000)		
72146-K93-N01	F-41	37
72147-K93-N02	F-41	26
72148-TY0-000	F-41	27
77115-K93-N00	F-24	2
77200-K93-N00ZA	F-24	3

Nomor Part	No. Blok	Ref
77200-K93-N00ZB	F-24	3
77215-KW7-900	F-24	4
77215-KZL-930	F-12	9
	F-24	5
77230-K16-900	F-24	6
77234-GN2-000	F-24	7
77240-K93-N01	F-24	8
77244-K16-A00	F-24	9
77245-K93-N00	F-24	10
80104-K93-N00	F-39	2
(80000)		
80105-K93-N00	F-39	3
80110-K93-N00	F-40	7
80111-K50-T00	F-40	8
80151-K93-N00ZK	F-15	1
	F-15	2
80151-K93-N00ZL	F-15	2
80151-K93-N00ZM	F-15	1
	F-15	2
80151-K93-N00ZN	F-15	2
80151-K93-N00ZP	F-15	2
80151-K93-N00ZQ	F-15	2
81110-KYT-940	F-12	10
81131-K93-N00	F-12	12
81132-GAH-000YV	F-12	13
81132-K93-N00	F-12	14
81134-K93-N00ZJ	F-12	15
81134-K93-N00ZK	F-12	15
81134-K93-N00ZL	F-12	15
81134-K93-N00ZM	F-12	15
81134-K93-N00ZN	F-12	15
81140-K93-N00ZN	F-12	16
81141-K93-N00ZJ	F-12	16
81141-K93-N00ZL	F-12	16
81141-K93-N00ZM	F-12	16
81142-K93-N00ZA	F-12	17
81142-K93-N00ZG	F-12	17
81142-K93-N00ZH	F-12	17
81142-K93-N00ZJ	F-12	17
81142-K93-N00ZK	F-12	17
81142-K93-N00ZL	F-12	17
81142-K93-N00ZM	F-12	17
81144-K93-N00ZB	F-12	18
81145-K93-N00	F-12	19
81201-K81-N00	F-24	11
81202-K81-N00	F-24	12
81250-K93-N00	F-24	13
81291-K93-N00	F-12	20
83500-K93-N00ZA	F-15	3
83500-K93-N00ZK	F-15	3
83500-K93-N00ZL	F-15	3
83500-K93-N00ZM	F-15	3
83500-K93-N00ZN	F-15	3
83500-K93-N00ZP	F-15	3

Nomor Part	No. Blok	Ref
83500-K93-N00ZQ	F-15	3
83600-K93-N00ZA	F-15	5
83600-K93-N00ZK	F-15	5
83600-K93-N00ZL	F-15	5
83600-K93-N00ZM	F-15	5
83600-K93-N00ZN	F-15	5
83600-K93-N00ZP	F-15	5
83600-K93-N00ZQ	F-15	5
83601-MN5-000	F-38	5
83642-171-000	F-24	14
83650-K93-N00ZA	F-15	6
83650-K93-N00ZK	F-15	6
83650-K93-N00ZL	F-15	6
83650-K93-N00ZM	F-15	6
83650-K93-N00ZN	F-15	6
83650-K93-N00ZP	F-15	6
83650-K93-N00ZQ	F-15	6
83650-K93-N00ZR	F-15	6
83750-K93-N00ZA	F-15	4
83750-K93-N00ZG	F-15	4
83750-K93-N00ZH	F-15	4
83750-K93-N00ZJ	F-15	4
83750-K93-N00ZK	F-15	4
83750-K93-N00ZL	F-15	4
83750-K93-N00ZM	F-15	4
83750-K93-N00ZN	F-15	4
86101-K93-N00ZA	F-48-3	1
86101-K93-N00ZE	F-48-4	1
	F-48-4	2
86101-K93-N30ZA	F-48-3	1
86101-K93-N30ZB	F-48-3	2
86101-K93-N30ZC	F-48-3	2
86101-K93-N30ZD	F-48-3	2
86101-K93-N30ZE	F-48-3	2
86150-KPG-901	F-2	8
86150-KPG-902	F-2	8
86150-KTJ-C60	F-2	8
86170-KZR-600	F-48-3	3
86170-KZR-600	F-48-4	3
86649-K93-N30ZA	F-48-3	6
86649-K93-N30ZB	F-48-3	6
86649-K93-N30ZC	F-48-3	6
86649-K93-N30ZD	F-48-3	6
86649-K93-N40ZA	F-48-4	6
86649-K93-N40ZB	F-48-4	6
86649-K93-N40ZC	F-48-4	6
86811-K93-N00ZA	F-48-3	7
	F-48-4	7
86836-K93-N00ZA	F-48-3	8
	F-48-4	8
871X0-K93-N00ZAL	F-48	1
871X0-K93-N00ZAR	F-48	2
871X0-K93-N00ZBL	F-48	1
871X0-K93-N00ZBR	F-48	2
871X0-K93-N10ZAL	F-48-1	1

Nomor Part	No. Blok	Ref
871X0-K93-N10ZAR	F-48-1	2
871X0-K93-N10ZBL	F-48-1	1
871X0-K93-N10ZBR	F-48-1	2
871X0-K93-N10ZCL	F-48-1	1
871X0-K93-N10ZCR	F-48-1	2
871X0-K93-N20ZAL	F-48-2	1
871X0-K93-N20ZAR	F-48-2	2
871X0-K93-N20ZBL	F-48-2	1
871X0-K93-N20ZBR	F-48-2	2
871X0-K93-N20ZCL	F-48-2	1
871X0-K93-N20ZCR	F-48-2	2
871X0-K93-N30ZAL	F-48-3	4
871X0-K93-N30ZAR	F-48-3	5
871X0-K93-N30ZBL	F-48-3	4
871X0-K93-N30ZBR	F-48-3	5
871X0-K93-N30ZCL	F-48-3	4
871X0-K93-N30ZCR	F-48-3	5
871X0-K93-N30ZDL	F-48-3	4
871X0-K93-N30ZDR	F-48-3	5
871X0-K93-N40ZAL	F-48-4	4
871X0-K93-N40ZAR	F-48-4	5
871X0-K93-N40ZBL	F-48-4	4
871X0-K93-N40ZBR	F-48-4	5
871X0-K93-N40ZCL	F-48-4	4
871X0-K93-N40ZCR	F-48-4	5
87505-K93-N00	F-47	1
87509-KWW-A40	F-47	2
87514-K81-N30	F-47	3
87560-KVB-930	F-47	4
87563-K59-A10	F-47	5
87586-KVB-930	F-47	6
88119-KWW-640	F-4-10	27
88211-K93-N00ZA	F-4-10	28
88211-K93-N00ZB	F-4-10	28
88211-K93-N00ZC	F-4-10	28
88211-K93-N00ZD	F-4-10	28
88211-K93-N00ZE	F-4-10	28
88211-K93-N00ZF	F-4-10	28
88211-K93-N00ZG	F-4-10	28
89102-538-000	F-46	1
89103-538-000	F-46	2
89216-KVY-960	F-46	3
(90000)		
90001-KWR-000	E-10	5
90002-GFC-900	E-11	6
90002-KWB-600	E-4	14
90005-KY7-000	E-5	7
90012-KWW-740	E-4	15
90014-GGC-900	E-3	8
90017-GCC-000	E-2	3
90031-K44-V00	E-19-10	7
90032-K44-V00	E-19-20	10
90083-GB6-911	E-4	16
90101-K29-900	E-13	10

INDEKS NOMOR PART

Nomor Part	No. Blok	Ref
90101-K29-900	E-19-20	11
90101-KWW-640	F-4-10	29
90101-MT4-000	F-41	28
90104-K81-N30	F-4-10	30
90105-KGH-900	F-20-40	9
90105-KVY-900	F-42	5
90106-GCC-000	F-42	6
90106-GN5-900	F-9	3
90107-K93-N00	F-2	9
90107-KGH-600	F-15	7
90107-KVB-900	F-12	21
	F-14	10
90108-MK6-670	F-35	7
90111-MR5-000	F-41	29
90112-KVB-900	F-22-30	9
90114-K44-V01	F-5	16
90115-K81-N30	F-4-10	31
90116-K81-N30	F-4-10	32
90116-KV3-701	F-17	17
90116-KVB-900	F-11	2
90116-KVG-A31	F-17	17
90116-SP0-003	F-14	11
90131-883-000	E-19-10	8
90131-KPH-880	F-18	15
90145-KPH-B30	F-5	17
90147-KVB-900	F-35	8
90164-KZL-A00	F-41	30
90191-K47-N41	F-9	4
90201-GCC-000	E-3	9
90202-KN7-670	E-17	15
90202-ZV0-000	F-30	5
90203-KVB-900	F-35	9
90206-001-000	E-4	17
90301-KWN-901	F-39	4
90301-KWW-640	F-4-10	33
90302-KVB-T01	F-4-10	34
90302-KWW-A00	F-12	22
	F-14	12
	F-15	8
	F-24	15
90304-KGH-901	F-9	5
	F-42	7
90305-KVB-901	F-22-30	10
90306-KGH-901	F-20-40	10
90401-GFM-900	E-3	10
90402-KWW-740	E-3	10
90412-KZL-840	E-16	15
90426-KZL-840	E-16	16
90439-443-740	E-16	17
90439-KWZ-900	E-10	6
90441-GY6-940	E-17	16
90443-MB0-000	E-3	11
90454-K16-A41	E-17	17
90464-K27-V02	E-17	18
90474-333-000	E-19-20	12

Nomor Part	No. Blok	Ref
90501-KBN-900	F-22-30	11
90501-KPH-880	F-9	6
90505-KPH-880	F-9	7
90543-MV9-670	E-2	4
90544-283-000	F-17	10
90545-300-000	F-5	18
90601-KZL-930	E-13	11
90651-K03-M61	F-5	19
90652-KZL-930	F-28	12
90656-GCC-000ZE	F-24	16
90666-K59-A11	F-12	23
90677-KAN-T00	F-14	13
	F-15	9
	F-38	6
	F-39	5
90701-KFM-900	E-3	12
	E-6	3
90702-KFM-900	E-11	7
	E-13	12
	E-17-10	10
90702-KZL-930	E-19-10	9
90741-003-010	E-20	6
91002-K44-V01	E-19-20	13
91002-K46-N21	E-19-20	13
91002-K50-T01	E-19-20	3
91003-K50-T01	E-17-10	11
91003-KZR-601	E-17-10	11
91003-KZR-602	E-17-10	11
91005-K50-T01	E-19-20	14
91005-KVB-900	E-13	13
91005-KVB-N50	E-13	13
91005-KVB-S50	E-13	13
91005-KZR-601	E-19-20	14
91005-KZR-602	E-19-20	14
91006-K50-T01	E-17-10	12
91006-KZR-601	E-17-10	12
91006-KZR-602	E-17-10	12
91008-K50-T01	E-19-20	15
91008-KZR-601	E-19-20	15
91008-KZR-602	E-19-20	15
91009-K16-A41	E-17-10	13
91009-K44-V01	E-17-10	13
91009-K50-T01	E-17-10	13
91009-KVY-961	E-17	19
91052-K03-N41	F-20-40	11
91052-K24-901	F-20-40	11
91052-K24-902	F-20-40	11
91052-K24-903	F-20-40	11
91052-K24-904	F-20-40	11
91109-KVY-902	E-17	20
91201-434-003	E-17-10	14
91201-K44-V01	E-19-10	10
91202-K50-T01	E-19-20	16
91203-K35-J01	E-19-20	17
91204-K44-V01	E-17-10	15

Nomor Part	No. Blok	Ref
91204-K50-T01	E-17-10	15
91211-K44-V01	E-17	21
91212-K44-V01	E-13	14
91251-KPH-901	F-20-40	12
91251-KZR-601	F-20-40	13
91301-GGL-J01	E-22	15
91301-GR0-004	E-5	8
91301-K44-V00	E-19-10	11
91302-001-020	E-19-20	18
91306-MG3-000	E-5	9
91307-035-000	E-19-10	12
91308-GFM-900	E-22	16
91351-642-000	E-17	22
91356-GM0-003	F-17	18
91356-KVG-901	F-17	18
91406-KFN-850	F-28	13
91406-MS8-000	F-28	13
91509-GE2-760	F-14	14
	F-15	10
	F-38	7
	F-40	9
91540-KPH-902	F-2	10
91580-SM4-003	F-40	10
92101-06020-4J	F-41	31
92900-06012-0B	E-3	13
92900-06040-0B	E-3	14
93404-06012-00	F-39	6
93404-06016-00	F-12	24
	F-26	16
93404-06018-00	F-24	17
93404-06020-00	E-1	7
93404-06040-08	F-28	14
93600-04012-1G	F-5	20
93892-05012-18	E-22	17
93892-05020-00	F-4-10	35
93892-05025-00	F-4-10	36
93893-04012-17	F-5	21
93901-24320	F-41	32
93901-34120	E-11	8
93903-24310	F-14	15
	F-15	11
93903-24380	F-12	25
	F-14	16
	F-15	12
	F-26	17
93903-24410	F-24	18
93903-25310	F-2	11
93903-25380	E-1	8
93903-25480	F-28	15
93903-34310	F-12	26
	F-14	17
	F-37	10
93903-34320	E-13	15
93903-34380	F-2	12
	F-12	27

Nomor Part	No. Blok	Ref
93903-34380	F-14	18
93903-34410	F-40	11
93903-35210	F-1	7
93903-35310	F-1	8
	F-9	8
	F-37	11
93903-35320	F-12	28
94021-10000-0S	F-36	5
94030-12200	E-17	23
94030-14200	E-16	18
94050-06000	E-22	18
	F-5	22
	F-26	18
	F-41	33
94050-12000	E-10	7
94101-06000	F-14-10	5
94101-08000	F-24	19
94101-10000	F-36	6
94101-10800	F-35	10
94109-12000	E-19-10	13
94201-16150	F-14-10	6
94201-16180	F-24	20
94201-30200	F-35	11
94301-08100	E-19-10	14
94510-20000	E-17-10	16
94511-16000	E-16	19
94520-52150	E-19-20	19
94540-03010	F-4-10	37
95002-02130	F-28	16
95002-50000	E-17-10	17
95002-80000	E-13	16
	F-28	17
95011-61000	F-35	12
95014-72102	F-35	13
95015-32001	F-22-30	12
95015-42000	F-22-30	13
95015-81000	F-14-10	7
95701-06012-00	F-5	23
	F-26	19
	F-41	34
95701-06014-00	E-10	8
	E-17-10	18
	E-19-10	15
	F-5	24
95701-06016-00	E-10	9
	E-19-20	20
	F-41	35
95701-06020-00	E-19-10	16
	F-41	36
95701-06022-00	E-5	10
	E-22	19
	F-24	21
95701-06030-00	E-17-10	19
	F-4-10	38
95701-06032-00	F-12	29

INDEKS NOMOR PART

Nomor Part	No. Blok	Ref
95701-06040-00	E-17-10	20
95701-06055-00	E-19-10	17
95701-06080-00	E-19-10	18
95701-06090-00	E-19-10	19
95701-06095-00	E-3	15
95701-06115-00	E-19-10	20
95701-08012-00	E-19-20	21
95701-08022-00	F-24	22
95701-08025-07	F-35	14
95701-10040-07	F-30	6
95801-06016-02	F-30	7
95801-08032-00	F-36	7
	F-42	8
95801-10045-08	F-10	12
96001-06010-00	F-24	23
96001-06020-00	E-22	20
96001-06022-07	F-4-10	39
	F-5	25
96001-06025-07	E-1	9
96001-06035-00	E-13	17
96001-06085-00	E-13	18
96211-08000	F-14-10	8
96220-30168	E-11	9
96700-06020-00	E-10	10
98200-40500	F-40	12
98200-41000	F-40	13
98200-42500	F-40	14

INDEKS NAMA PART

Nama Part	No. Blok	Ref
(A)		
ARM ASSY., EX. VALVE ROCKER	E-4	5
ARM, RR. BRAKE	F-22-30	7
	F-22-31	7
AXLE, FR. WHEEL	F-20-40	2
	F-20-41	2
(B)		
ARM ASSY., KICK STARTER	F-35	1
ARM COMP., EX. VALVE ROCKER	E-4	5
ARM COMP., IN. VALVE ROCKER	E-4	4
ARM, L. PILLION STEP	F-14-10	4
ARM, R. PILLION STEP	F-14-10	3
ARM, RR. BRAKE	F-22-30	7
AXLE, RR. WHEEL(FOR FR.)	F-20-40	1
BAG, OWNERS MANUAL	F-24	14
BALL SET, STEEL, #6X23	F-10	1
BALL SET, STEEL, #6X29	F-10	2
BALL, STEEL, #8(1/4)	F-14-10	8
BAND, AIR CLEANER CONNECTING TUBE	F-28	12
BAR COMP., SIDE STAND	F-35	6
BATTERY COMP.(CR1632)	F-41	27
BATTERY(GTZ6V)(GS YUASA)	F-40	1
BATTERY(YTZ6V)(GS YUASA)	F-40	1
BEARING COMP.(6002UU)	E-13	13
BEARING, NEEDLE, 20X29X18	E-17	20
BEARING, RADIAL BALL SPECIAL,6007	E-19-20	3
	E-19-20	13
BEARING, RADIAL BALL(6201U L)	F-20-40	11
BEARING, RADIAL BALL, 60/22 UU	E-17-10	13
BEARING, RADIAL BALL, 6201	E-17-10	12
BEARING, RADIAL BALL, 6204	E-17-10	11
BEARING, RADIAL BALL, 6301	E-19-20	14
BEARING, RADIAL BALL, 6302	E-19-20	15
BEARING, RADIAL BALL, 6902U	E-17	19
BELT, DRIVE	E-17	7
BODY COMP., FRAME	F-42	1
BODY SET	E-22	7
BOLT A, STUD, 7X192.5	E-19-10	7
BOLT B, STUD, 7X197	E-19-20	10
BOLT, ADAPTER, 10MM	F-4-10	29
BOLT, BRAKE DISK, 8X24	F-20-40	9
BOLT, DRAIN PLUG, 12X15	E-19-10	8
BOLT, FLANGE, 10X238	F-42	6
BOLT, FLANGE, 10X270	F-42	5
BOLT, FLANGE, 10X40	F-30	6
BOLT, FLANGE, 10X45	F-10	12
BOLT, FLANGE, 10X50	F-9	3
BOLT, FLANGE, 5X12	E-4	14
BOLT, FLANGE, 6MM	F-11	2
BOLT, FLANGE, 6X10	F-24	23
BOLT, FLANGE, 6X115	E-19-10	20
BOLT, FLANGE, 6X12	F-5	23
	F-26	19

Nama Part	No. Blok	Ref
BOLT, FLANGE, 6X12	F-41	34
BOLT, FLANGE, 6X14	E-10	8
	E-17-10	18
	E-19-10	15
	F-5	24
BOLT, FLANGE, 6X16	E-10	9
	E-19-20	20
	F-30	7
	F-41	35
BOLT, FLANGE, 6X20	E-19-10	16
	E-22	20
	F-41	36
BOLT, FLANGE, 6X22	E-5	10
	E-22	19
	F-4-10	39
	F-5	25
	F-24	21
BOLT, FLANGE, 6X25	E-1	9
BOLT, FLANGE, 6X30	E-17-10	19
	F-4-10	38
BOLT, FLANGE, 6X32	F-12	29
	F-22-30	9
BOLT, FLANGE, 6X35	E-13	17
BOLT, FLANGE, 6X40	E-17-10	20
BOLT, FLANGE, 6X55	E-19-10	17
BOLT, FLANGE, 6X80	E-19-10	18
BOLT, FLANGE, 6X85	E-13	18
BOLT, FLANGE, 6X90	E-19-10	19
BOLT, FLANGE, 6X95	E-3	15
BOLT, FLANGE, 8X12	E-19-20	21
BOLT, FLANGE, 8X22	F-24	22
BOLT, FLANGE, 8X25	F-35	14
BOLT, FLANGE, 8X32	F-36	7
	F-42	8
BOLT, HANDLE LEVER	F-5	16
BOLT, HEAD COVER	E-2	3
BOLT, HEX., 6X20	F-41	31
BOLT, HEX., 6X30	E-11	6
BOLT, KNOCK, 5MM	E-4	16
BOLT, OIL, 10X22	F-5	17
BOLT, PIN	F-18	7
BOLT, SIDE STAND PIVOT	F-35	7
BOLT, SOCKET, 10X25	F-17	17
BOLT, SOCKET, 5X9	F-41	29
BOLT, SOCKET, 6X18	E-10	5
	E-13	10
	E-19-20	11
BOLT, SOCKET, 6X20	E-10	10
BOLT, SOCKET, 8MM(SH)	F-17	17
BOLT, SPECIAL, 6MM	F-12	21
	F-14	10
BOLT, SPECIAL, 6X16	F-35	8
BOLT, STUD, 6X12	E-3	13
BOLT, STUD, 6X40	E-3	14

Nama Part	No. Blok	Ref
BOLT, TORX, 8X25	F-18	15
BOLT-WASHER, 6X12	F-39	6
BOLT-WASHER, 6X13	E-3	8
BOLT-WASHER, 6X16	F-12	24
	F-26	16
BOLT-WASHER, 6X18	F-24	17
BOLT-WASHER, 6X20	E-1	7
BOLT-WASHER, 6X40	F-28	14
BOOT B	F-18	9
BOOT COMP.	F-5	6
BOOT, PIN BUSH	F-18	8
BOSS, DRIVE FACE	E-16	4
BOX, LUGGAGE	F-24	13
BRACKET SUB ASSY., FR. CALIPER	F-18	11
BRACKET, AIMING ADJUSTER	F-1	4
BRACKET, FR. NUMBER PLATE	F-12	10
BRACKET, L. BRAKE LEVER	F-4-10	20
BULB, STOP & TAILLIGHT(12V 21/5W)	F-38	4
BULB, WINKER LIGHT(12V 10W)	F-37	9
BUSH, ENGINE HANGER RUBBER	E-19-10	2
	E-19-20	1
BUSH, KICK SPINDLE	E-16	12
BUSH, MAIN STAND	E-19-10	3
	E-19-20	4
BUSH, RR. CUSHION UNDER RUBBER	E-19-20	3
	E-19-20	3
BUSH, RUBBER	F-36	3
	F-36	4
BUZZER ASSY.	F-41	22
(C)		
CABLE COMP. A, THROTTLE	F-4-10	1
CABLE COMP. B, THROTTLE	F-4-10	2
CABLE COMP., FR. BRAKE CONNECTING	F-4-10	14
CABLE COMP., RR. BRAKE	F-4-10	15
CABLE COMP., SEAT LOCK	F-24	8
CALIPER SUB ASSY., L. FR.	F-18	10
CAM, RR. BRAKE	F-22-30	5
CAMSHAFT COMP.	E-4	2
CAP ASSY.	F-41	23
CAP ASSY., NOISE SUPPRESSOR	F-41	4
CAP, BLEEDER	F-18	4
CAP, DUMMY(4P)(RED)	F-40	4
CAP, FR. FORK	F-17	12
CAP, FUEL FILLER	F-26	13
CAP, L. COVER	E-13	7
CAP, LOCK NUT	F-4-10	27
CAP, MASTER CYLINDER	F-5	8
CAP, TAPPET ADJUSTING HOLE	E-19-20	5
CASE ASSY., UNDER	F-2	4
CASE COMP., L. FR. BOTTOM(SH)	F-17	16
CASE COMP., R. FR. BOTTOM(SH)	F-17	6
CASE COMP., TRANSMISSION	E-17-10	4
CASE SUB ASSY., AIR CLEANER	F-28	6

5

INDEKS NAMA PART

Nama Part	No. Blok	Ref
CASE, L. FR. BOTTOM(KY)	F-17	16
CASE, R. FR. BOTTOM(KY)	F-17	6
CASE, UPPER	F-41	37
CATCH COMP., SEAT	F-24	6
CHAIN, CAM(90L)(BO)	E-5	1
CHAIN, CAM(90L)(DA)	E-5	1
CIRCLIP, 4MM	E-17	17
CIRCLIP, EXTERNAL, 16MM	E-16	19
CIRCLIP, EXTERNAL, 20MM	E-17-10	16
CIRCLIP, INTERNAL, 18.8	F-5	19
CIRCLIP, INTERNAL, 28MM	E-17	18
CIRCLIP, INTERNAL, 32MM	E-13	11
CIRCLIP, INTERNAL, 52MM	E-19-20	19
CLAMP, ENGINE HARNESS	E-19-10	6
CLAMP, TUBE(D14.5)	F-28	13
CLAMPER A, BRAKE HOSE	F-5	3
CLAMPER B, BRAKE HOSE	F-5	4
CLAMPER, A.C. GENERATOR CORD	E-10	4
CLAMPER, RR. BRAKE CABLE	F-4-10	16
CLAMPER, THROTTLE CABLE	F-4-10	3
CLIP, BUMPER SEAL	F-14	11
CLIP, COUPLER(ORANGE)	F-40	10
CLIP, HARNESS BAND	F-2	10
CLIP, OIL DRAIN TUBE	F-28	1
CLIP, PISTON PIN, 13MM	E-20	5
CLIP, SNAP FITTING(PO)	F-12	23
CLIP, TUBE(B12.5)	F-28	16
CLIP, TUBE(C12)	E-13	16
	F-28	17
CLIP, TUBE(C9)	E-17-10	17
CLIP, VALVE GUIDE	E-3	3
COIL COMP., IGNITION	F-41	2
COLLAR A, HANDLE SETTING	F-9	6
COLLAR B, HANDLE SETTING	F-9	7
COLLAR, AIR CLEANER SETTING	F-28	2
COLLAR, FR. WHEEL SIDE	F-20-40	4
	F-20-40	5
COLLAR, HORN SETTING	F-41	15
COLLAR, KICK BOSS	E-16	13
COLLAR, LUGGAGE BOX	F-24	11
	F-24	12
COLLAR, MUFFLER PROTECTOR	F-30	3
COLLAR, RR. AXLE DISTANCE(FOR FR.)	F-20-40	2
COLLAR, SEAL	E-17	13
COLLAR, SEAT CATCH COVER	F-24	10
COLLAR, SPRING	E-17	14
COLLAR, TAILLIGHT SETTING	E-1	6
CONTROL UNIT, ALARM & ANSWER BACK	F-41	21
CONTROL UNIT, ENGINE	F-41	1
COTTER, VALVE	E-4	13
COUNTERSHAFT(12T)	E-17-10	7
COVER A, SPEEDOMETER(WL)	F-2	6
COVER B, SPEEDOMETER	F-2	5
COVER COMP., FAN	E-1	1
COVER COMP., HEAD	E-2	1
COVER COMP., L. SIDE	E-13	2
COVER COMP., SPEEDOMETER RING	F-2	7
COVER SUB ASSY., AIR CLEANER	F-28	7
COVER, ACCESSORY SOCKET	F-12	1
COVER, BATTERY	F-40	7
COVER, BATTERY TERMINAL	F-40	3
COVER, CABLE	F-41	13
COVER, CENTER	F-15	2
COVER, CENTER(WL)	F-15	1
COVER, FR. TOP(WL)	F-12	8
COVER, FUEL TANK	F-26	12
COVER, INNER UPPER	F-12	15
COVER, INNER(WL)	F-12	16
COVER, L. BRAKE LEVER BRACKET	F-4-10	21
COVER, L. FR.	F-12	6
COVER, L. FR.(WL)	F-12	7
COVER, L. PILLION STEP	F-14	3
COVER, L. UNDER SIDE	F-14	8
COVER, L. UNDER SIDE(WL)	F-14	7
COVER, MUFFLER	F-30	4
COVER, OIL PUMP	E-19-10	4
COVER, R. BODY(WL)	F-15	3
	F-15	5
COVER, R. FR.	F-12	5
COVER, R. FR.(WL)	F-12	4
COVER, R. PILLION STEP	F-14	2
COVER, R. UNDER SIDE	F-14	6
COVER, R. UNDER SIDE(WL)	F-14	5
COVER, RR. CENTER LOWER	F-15	6
COVER, RR. CENTER(WL)	F-15	4
COVER, SEAL	F-41	19
	F-41	20
COVER, SEAT CATCH	F-24	9
COVER, UNDER	F-14	4
COVER, VENT HOLE	E-13	1
CRANKCASE COMP., L.	E-19-20	2
CRANKCASE COMP., R.	E-19-10	1
CRANKSHAFT COMP.	E-20	1
CUSHION ASSY., RR.	F-36	1
	F-36	2
CYLINDER ASSY., FR. BRAKE MASTER	F-5	5
CYLINDER COMP.	E-6	1
CYLINDER SET, MASTER	F-5	12
(D)		
DIAPHRAGM	F-5	10
DISK, FR. BRAKE	F-20-40	8
DOWEL PIN, 8X10	E-19-10	14
DOWEL PIN, 8X12	E-11	7
	E-13	12
	E-17-10	10
DOWEL PIN, SPECIAL, 8X14	E-3	12
	E-6	3
DRIVER, SCREW(NO.2 + -)	F-46	1
DUCT, L. COVER	E-13	6
DUST SEAL, 21X32X5	F-20-40	13
DUST SEAL, 21X37X7	F-20-40	12
DUST SEAL, STEERING HEAD	F-10	8
(E)		
ELEMENT COMP., AIR CLEANER	F-28	3
EMBLEM, PRODUCT	F-2	8
EQUALIZER COMP.	F-4-10	23
E-RING, 3MM	F-4-10	37
(F)		
FACE COMP., MOVABLE DRIVE	E-16	6
FACE SET, DRIVEN	E-17	8
FACE SET, MOVABLE DRIVEN	E-17	9
FACE, DRIVE	E-16	2
FAN COMP., COOLING	E-10	1
FENDER, FR.	F-11	1
FENDER, RR.	F-39	3
FILTER SET	F-26	3
FLYWHEEL COMP.	E-10	2
FORK ASSY., L. FR.	F-17	15
FORK ASSY., R. FR.	F-17	1
FUEL UNIT	F-26	15
FUSE, MINI(10A)	F-40	13
FUSE, MINI(25A)	F-40	14
FUSE, MINI(5A)	F-40	12
(G)		
GASKET, CYLINDER	E-6	2
GASKET, CYLINDER HEAD(O.S. 0.75/1.00)	E-3	4
GASKET, CYLINDER HEAD(STD./0.25/0.50)	E-3	4
GASKET, EX. PIPE	F-30	1
GASKET, HEAD COVER	E-2	2
GASKET, L. COVER	E-13	5
GASKET, MISSION CASE	E-17-10	5
GASKET, TENSIONER LIFTER	E-5	5
GAUGE, OIL LEVEL	E-19-10	5
GEAR COMP., FINAL(45T)	E-17-10	9
GEAR COMP., KICK DRIVEN(7T)	E-16	10
GEAR, COUNTER(51T)	E-17-10	8
GEAR, OIL PUMP DRIVEN(39T)	E-11	2
GRIP	F-46	2
GRIP COMP., THROTTLE	F-4-10	18
GRIP, L. HANDLE	F-4-10	19
GROMMET, SIDE COVER	F-38	5
GUARD, NUMBER PLATE	F-12	3
GUARD, RR. SPLASH	F-39	2
GUIDE, CAM CHAIN	E-5	6
GUIDE, VALVE(O.S.)	E-3	2
(H)		
HARNESS, WIRE	F-41	6

INDEKS NAMA PART

Nama Part	No. Blok	Ref
HEAD COMP., CYLINDER	E-3	1
HEADLIGHT UNIT	F-1	2
HOLDER, MIRROR	F-4-10	17
HOOK, LUGGAGE	F-12	13
HORN COMP.	F-41	14
HOSE COMP., FR. BRAKE	F-5	2
HOSE COMP., FUEL FEED	F-26	10
HOUSING COMP., STARTER SWITCH	F-4-10	6
HOUSING COMP., WINKER SWITCH	F-4-10	12
HOUSING, STARTER SWITCH RR.	F-4-10	5
HOUSING, WINKER SWITCH RR.	F-4-10	11
(I)		
INJECTOR ASSY., FUEL	E-22	8
INSULATOR, IN. PIPE	E-22	13
(J)		
JOINT B, BRAKE ARM	F-22-30	12
JOINT COMP., INJECTOR	E-22	14
JOINT, FUEL TUBE	F-26	8
(K)		
KEY SET	F-41	8
KEY, BLANK	F-41	11
KEY, WOODRUFF, 4MM	E-20	6
KNOB, POCKET LID	F-12	18
(L)		
LABEL, AIR CLEANER ELEMENT NOTICE	F-47	2
LABEL, CBS CAUTION	F-47	3
LABEL, DRIVE CAUTION	F-47	4
LABEL, FUEL	F-47	6
LABEL, TIRE	F-47	1
LENS	F-2	3
LEVER COMP., BRAKE LOCK	F-4-10	24
LEVER, L. STEERING HANDLE	F-4-10	22
LEVER, R. STEERING HANDLE	F-5	13
LID, BATTERY	F-14	9
LID, L. POCKET	F-12	17
LIFTER ASSY., TENSIONER	E-5	3
LINK ASSY., ENGINE HANGER	F-42	2
(M)		
MARK(SCOOPY)	F-48-3	8
	F-48-4	8
	F-48-4	6
MARK(STYLISH)	F-48-3	6
MARK, ALARM SYSTEM	F-48-3	7
	F-48-4	7
MARK, ENGINE	F-48-3	3
	F-48-4	3
MARK, HONDA(65MM)	F-48-3	1
	F-48-3	2
	F-48-4	1
MARK, HONDA(65MM)	F-48-4	2
METER ASSY., COMBINATION(KPH)	F-2	1
MIRROR COMP.	F-4-10	28
MUFFLER COMP., EX.	F-30	2
(N)		
NUT B, BRAKE ROD ADJUSTING	F-22-30	13
NUT, CAP, 10MM	F-36	5
NUT, CAP, 6MM	F-30	5
NUT, CLIP, 5MM	F-14	13
	F-15	9
	F-38	6
	F-39	5
NUT, FLANGE, 12MM	E-10	7
NUT, FLANGE, 6MM	E-22	18
	F-5	22
	F-26	18
	F-41	33
NUT, HEX., 10MM	F-4-10	33
NUT, HEX., 12MM	E-17	23
NUT, HEX., 14MM	E-16	18
NUT, HEX., 7MM	E-3	9
NUT, SIDE STAND	F-35	9
NUT, SPECIAL	F-1	3
NUT, SPECIAL, 28MM	E-17	15
NUT, SPRING, 4MM	F-12	22
	F-14	12
	F-15	8
	F-24	15
NUT, STEERING STEM LOCK	F-10	5
NUT, TAPPET ADJUSTING	E-4	17
NUT, U, 10MM	F-9	5
	F-42	7
NUT, U, 12MM	F-20-40	10
NUT, U, 16MM	F-22-30	10
NUT, U, 5MM	F-4-10	34
	F-39	4
(O)		
OIL SEAL, 14X20X3.2	E-17-10	14
OIL SEAL, 16X26X6	E-13	14
OIL SEAL, 20.8X30.5X6	E-19-10	10
OIL SEAL, 20.8X52X6X7.5	E-19-20	16
OIL SEAL, 20X32X6	E-19-20	17
OIL SEAL, 29X44X7	E-17-10	15
O-RING(P7)	F-26	2
O-RING, 1.5X9.5	E-5	9
O-RING, 1.9X20.4	E-22	3
O-RING, 15.2X1.5	E-5	8
O-RING, 16.8X2.4	F-17	18
O-RING, 18X3	E-19-10	12
O-RING, 25.5X1.9	E-22	16
O-RING, 30.8MM	E-19-20	18
O-RING, 6.3X2.2	E-22	15
O-RING, 61X2	E-19-10	11
O-RING, FUEL PUMP(AR)	F-26	11
O-RING, FUEL PUMP(IK)	F-26	11
O-RING, PINION CAP	E-17	22
O-RING, THROTTLE BODY	E-22	2
OUTER COMP., CLUTCH	E-17	1
(P)		
PACKING, FUEL FILLER CAP	F-26	14
PAD SET, FR. BRAKE	F-18	2
PIECE SET, SLIDE	E-16	1
PIN A, PILLION STEP	F-14-10	7
PIN, BRAKE LOCK LEVER	F-4-10	25
PIN, HANGER	F-18	12
PIN, PISTON	E-20	4
PIN, ROLLER GUIDE	E-17	10
PIN, SEAT HINGE	F-12	9
	F-24	5
PIN, SPECIAL DOWEL, 6.3X10X12	E-19-10	9
PIN, SPLIT, 1.6X15	F-14-10	6
PIN, SPLIT, 1.6X18	F-24	20
PIN, SPLIT, 3.0X20	F-35	11
PIPE COMP., FR. FORK	F-17	3
PIPE COMP., STEERING HANDLE	F-9	1
PIPE, CP	F-37	1
PIPE, IN.	E-22	12
PIPE, SEAT	F-17	9
PISTON	F-18	14
PISTON(0.25)	E-20	3
PISTON(0.50)	E-20	3
PISTON(0.75)	E-20	3
PISTON(1.00)	E-20	3
PISTON(STD.)	E-20	3
PIVOT, CAM CHAIN TENSIONER	E-5	4
PLATE COMP., DRIVE	E-17	2
PLATE, CLUTCH SIDE	E-17	3
PLATE, DIAPHRAGM	F-5	11
PLATE, L. COVER	E-13	3
PLATE, L. HEADLIGHT UNIT	F-1	6
PLATE, MISSION BEARING SETTING	E-17-10	1
PLATE, PILLION STEP CLICK	F-14-10	2
PLATE, R. HEADLIGHT UNIT	F-1	5
PLATE, RAMP	E-16	8
PLUG, AIR CLEANER DRAIN	F-28	8
PLUG, BREATHER TUBE	F-28	11
PLUG, HOLE	F-24	16
PLUG, SPARK(MR9C-9N)(NG)	E-3	5
PLUG, SPARK(U27EPR-N9)(DS)	E-3	5
POCKET, L. INNER	F-12	14
POCKET, R. INNER	F-12	12
PROTECTOR	F-5	7
PROTECTOR, SPEED SENSOR	E-19-20	8
PUMP ASSY., OIL	E-11	1
PUMP UNIT, FUEL	F-26	1

INDEKS NAMA PART

Nama Part	No. Blok	Ref
(R)		
RACE, STEERING BOTTOM BALL	F-10	4
RACE, STEERING BOTTOM CONE	F-10	7
RACE, STEERING TOP BALL	F-10	3
RACE, STEERING TOP CONE	F-10	6
RAIL, RR. GRAB	F-24	1
	F-24	2
RATCHET, STARTER	E-16	5
RECTIFIER ASSY., SILICON	F-41	5
REFLECTOR, REFLEX	F-39	1
RELAY ASSY., POWER (MICRO ISO 4P)	F-40	5
RELAY COMP., POWER (MICRO ISO 4P)	F-40	5
RELAY COMP., POWER (MICRO ISO 5P)	F-40	6
RELAY COMP., WINKER	F-41	16
	F-41	17
RETAINER, FUEL PUMP	F-26	6
RETAINER, VALVE SPRING	E-4	11
RING SET, PISTON(0.25)	E-20	2
RING SET, PISTON(0.50)	E-20	2
RING SET, PISTON(0.75)	E-20	2
RING SET, PISTON(1.00)	E-20	2
RING SET, PISTON(STD.)	E-20	2
RING, BACK UP	F-17	5
RING, OIL SEAL STOPPER(SH)	F-17	11
RING, PISTON	F-17	8
RING, SEAL	E-22	9
RING, SNAP	F-17	11
RING, SNAP(KY)	F-17	13
RING, STOPPER	F-17	13
	F-18	6
ROLLER SET, WEIGHT	E-16	7
ROLLER, 3X16.8	E-11	9
ROLLER, GUIDE	E-17	11
ROTOR, OIL PUMP INNER	E-11	4
ROTOR, OIL PUMP OUTER	E-11	5
RUBBER A, STAND STOPPER	F-35	12
RUBBER B, MOUNTING	F-41	25
RUBBER C, SEAT SETTING	F-24	4
RUBBER, CLUTCH DAMPER	E-17	6
RUBBER, HEADLIGHT	F-1	1
RUBBER, LINK STOPPER	F-42	3
RUBBER, MOUNTING	E-1	5
	E-2	4
RUBBER, SEAL	F-24	2
(S)		
SCREEN, OIL FILTER	E-19-20	6
SCREW SET	E-22	1
SCREW, 6X12	F-15	7
SCREW, BLEEDER	F-18	3
SCREW, BLEEDER(NI)	F-18	3
SCREW, FLAT, 4X12	F-5	20
SCREW, HANDLE LEVER PIVOT	F-4-10	31
	F-4-10	32

Nama Part	No. Blok	Ref
SCREW, OVAL, 6X45	F-9	4
SCREW, PAN, 5X11.5	F-14	14
	F-15	10
	F-38	7
	F-40	9
SCREW, PAN, 5X16	F-2	9
SCREW, PAN, 5X8	F-4-10	30
SCREW, PAN, 6X6	E-5	7
SCREW, SCREEN SETTING	F-41	28
SCREW, TAPPET ADJUSTING	E-4	15
SCREW, TAPPING, 4X12	E-13	15
	F-2	12
	F-12	25
	F-12	26
	F-12	27
	F-14	15
	F-14	16
	F-14	17
	F-14	18
	F-15	11
	F-15	12
	F-26	17
	F-37	10
	F-41	32
SCREW, TAPPING, 4X16	F-24	18
	F-40	11
SCREW, TAPPING, 4X8	E-11	8
SCREW, TAPPING, 5X12	F-1	7
SCREW, TAPPING, 5X16	E-1	8
	F-1	8
	F-2	11
	F-9	8
	F-12	28
	F-37	11
SCREW, TAPPING, 5X20	F-28	15
SCREW, TORX, 5X8.7	E-22	4
SCREW, U-LOCK FLAT, 6X12	F-41	30
SCREW-WASHER, 4X12	F-5	21
SCREW-WASHER, 5X12	E-22	17
SCREW-WASHER, 5X20	F-4-10	35
SCREW-WASHER, 5X25	F-4-10	36
SEAL A, AIR CLEANER	F-28	4
SEAL SET, FR. FORK(KY)	F-17	14
SEAL SET, FR. FORK(SH)	F-17	14
SEAL SET, PISTON	F-18	1
SEAL, DRIVEN FACE, 34X41X4	E-17	21
SEAL, DUCT	E-13	8
	F-26	7
	F-17	7
SEAL, INNER COVER	F-12	20
SEAL, L. DUCT COVER	E-13	9
SEAL, SHROUD	E-1	3
SEAL, VALVE STEM	E-4	1
SEAT B, SPRING	F-17	12

Nama Part	No. Blok	Ref
SEAT COMP., DOUBLE	F-24	3
SEAT SET	E-22	11
SEAT, VALVE SPRING	E-4	12
SENSOR ASSY., SPEED	E-19-20	9
SENSOR ASSY., THERMOSTAT OIL	E-3	7
SENSOR, OXYGEN	E-3	6
SHAFT COMP., OIL PUMP	E-11	3
SHAFT, DRIVE(18T)	E-17-10	6
SHAFT, EX. ROCKER ARM	E-4	7
SHAFT, IN. ROCKER ARM	E-4	6
SHAFT, MAIN STAND	F-35	4
SHOE SET, BRAKE	F-22-30	1
SHROUD, EX.	E-1	4
SHROUD, IN.	E-1	2
SHUTTER, KEY	F-41	10
SLEEVE, RR. BRAKE CAM	E-17-10	2
SOCKET ASSY.	F-41	24
SOCKET COMP., L. RR. WINKER	F-37	8
SOCKET COMP., R. RR. WINKER	F-37	6
SOCKET COMP., TAILLIGHT	F-38	3
SOCKET COMP., WINKER	F-37	4
SOLENOID	E-22	10
SPACER, IGNITION COIL	F-41	3
SPEEDOMETER COMP.(KPH)	F-2	2
SPINDLE COMP., KICK STARTER	E-16	11
SPRING A, SIDE STAND	F-35	13
SPRING, BRAKE LEVER RETURN	F-5	15
SPRING, BRAKE LOCK ARM RETURN	F-4-10	26
SPRING, BRAKE SHOE	F-22-30	6
SPRING, CLUTCH	E-17	4
SPRING, DRIVEN FACE	E-17	12
SPRING, FR. FORK	F-17	2
SPRING, KICK DRIVEN GEAR	E-16	9
SPRING, KICK RETURN	E-16	14
SPRING, KICK STARTER STOPPER	F-14-10	1
SPRING, LID	F-12	19
SPRING, MAIN STAND	F-35	5
SPRING, OIL FILTER SCREEN	E-19-20	7
SPRING, PAD	F-18	5
SPRING, REBOUND	F-17	4
SPRING, RETURN	F-5	14
SPRING, RR. BRAKE ARM	F-22-30	8
SPRING, SEAT LOCK	F-24	7
SPRING, VALVE	E-4	10
SPROCKET, CAM(34T)	E-4	3
STAND COMP., MAIN	F-35	3
STATOR COMP.	E-10	3
STAY, FR. COVER	F-42	4
STAY, FUSE BOX	F-40	8
STAY, RECEIVER	F-12	2
STAY, WIRE	E-22	5
STEM SUB ASSY., STEERING	F-10	10
STEP, FLOOR	F-14	1
STICKER, COMBI BRAKE	F-47	5

INDEKS NAMA PART

Nama Part	No. Blok	Ref
STRIPE SET, L	F-48-1	1
	F-48-2	1
	F-48	1
	F-48-3	4
	F-48-4	4
STRIPE SET, R	F-48-1	2
	F-48-2	2
	F-48	2
	F-48-3	5
	F-48-4	5
SUB HARNESS, BATTERY	F-40	2
SUB HARNESS, SPEEDOMETER	F-41	7
SUSPENSION, WINKER RELAY	F-41	18
SWITCH ASSY., COMBINATION & LOCK	F-41	9
SWITCH ASSY., FR. STOP	F-4-10	13
	F-5	1
SWITCH ASSY., SEAT OPENER	F-41	12
SWITCH ASSY., SIDE STAND	F-35	2
SWITCH UNIT, DIMMER	F-4-10	7
SWITCH UNIT, HORN	F-4-10	8
SWITCH UNIT, IDLE	F-4-10	9
SWITCH UNIT, STARTER	F-4-10	4
SWITCH UNIT, WINKER	F-4-10	10
(T)		
TAILLIGHT UNIT(STANLEY)	F-38	2
TANK COMP., FUEL	F-26	5
TENSIONER, CAM CHAIN	E-5	2
THREAD COMP., STEERING HEAD TOP	F-10	11
THROTTLE BODY ASSY.(GQRGB A)	E-22	6
TIRE, FR.(IRC)(100/90-12 59J)	F-20-40	7
TIRE, RR.(110/90-12 64J)	F-22-30	3
TRANSMITTER ASSY., ALARM & ANSWER	F-41	26
TRAY, FUEL	F-26	4
TUBE A, DRAIN	F-28	10
TUBE, AIR CLEANER CONNECTING	F-28	9
TUBE, BREATHER	F-28	5
TUBE, DRAIN	E-13	4
	F-26	9
TUBE, MISSION BREATHER	E-17-10	3
V)		
VALVE, EX.	E-4	9
VALVE, IN.	E-4	8
VALVE, RIM(IR)	F-20-40	3
	F-22-30	4
(W)		
WASHER, 12.2X29X2.5	E-17	16
WASHER, 12X24X2.3	E-10	6
WASHER, 15X25X2	E-16	3
WASHER, 16MM	F-22-30	11
WASHER, 16X22	E-16	17
WASHER, 7.2X16X2.5	E-3	10
WASHER, DRAIN PLUG, 12MM	E-19-10	13
WASHER, OIL BOLT	F-5	18
	F-17	10
WASHER, PLAIN, 10MM	F-35	10
	F-36	6
WASHER, PLAIN, 6MM	F-14-10	5
WASHER, PLAIN, 8MM	F-24	19
WASHER, SEALING, 10.2MM	E-3	11
WASHER, SEALING, 8MM	E-19-20	12
WASHER, SPECIAL, 14MM	E-16	16
WASHER, SPECIAL, 8MM(SH)	F-17	10
WASHER, STEERING STEM NUT	F-10	9
WASHER, THRUST, 10MM	E-16	15
WASHER, WAVE	F-18	13
WEIGHT A, HANDLE	F-9	2
WEIGHT SET, CLUTCH	E-17	5
WHEEL SUB ASSY., FR.	F-20-40	6
WHEEL SUB ASSY., RR.	F-22-30	2
WINKER COMP., L. FR.	F-37	3
WINKER COMP., L. RR.	F-37	7
WINKER COMP., R. FR.	F-37	2
WINKER COMP., R. RR.	F-37	5
WRENCH, SPARK PLUG	F-46	3

Nama Part	No. Blok	Ref

PT Astra Honda Motor
TECHNICAL SERVICE DIVISION

Dipublikasikan oleh :
Honda Motor Co., Ltd.
Dicetak di Indonesia

ID.TMG.4742.2018.02.18