HONDA

SONIC 150R
(FS150R)

REPSOL 2015 (FS150G)
STANDARD 2015 (FS150G)

PARTS CATALOG
1

18K56GI1

© Honda Motor Co., Ltd. 2015

DAFTAR ISI

PETUNJUK PEMAKAIAN 1

KELOMPOK MESIN 2

KELOMPOK RANGKA 3

INDEKS NOMOR PART 4

INDEKS NAMA PART 5

Instruksi penggunaan parts catalog

- **Parts catalog ini telah dibuat pertanggal 20 Oktober 2014.**
  - Setelah tanggal ini, mungkin terjadi perubahan pada parts di dalam catalog ini, dan parts tertentu diganti dengan parts lain atau dihapus (tidak dijual lagi).
  - Bacalah parts catalog news untuk revisi yang dilakukan setelah 20 Oktober 2014.
- **Selalu beritahu nomor part sewaktu memesan part.**
  - Periksa model, tipe, nomor seri, warna, pabrik pembuat, dan ukuran seperlunya sebelum memesan part.
  - Perhatikan bahwa ilustrasi (gambar part) dapat berbeda dalam bentuknya dari part sebenarnya. Ilustrasi hanya diberikan untuk membantu anda mencari parts tersebut.
- **Sewaktu terjadi modifikasi atau penambahan pada parts catalog ini, maka akan diterbitkan edisi yang direvisi pada waktu yang sesuai, yang memuat nomor revisi yang berurutan pada sampulnya. Kami menganjurkan agar anda mendapatkan revisi-revisi tersebut supaya parts catalog anda tetap mengikuti perkembangan mutakhir setiap waktu. Untuk mengetahui apakah revisi parts catalog telah diterbitkan, hubungi distributor Honda anda.**

Versi penerbitan pertama
tanggal 20 Oktober 2014
Honda Motor Co., Ltd.

DAFTAR ISI

	Halaman
Instruksi penggunaan parts catalog	1
Cara mencari informasi part	2
Struktur parts catalog	3
Jika parts telah direvisi	5
Singkatan-singkatan yang dipakai di dalam parts catalog	5
Blok part dan pengecekan nomor seri	6
Model, kode parts catalog dan nomor seri yang berlaku	7
Tabel warna	8
Selang bahan bakar, selang untuk keperluan umum dan selang vinyl	10
FLAT RATE SERVICE TIME	14
Indeks gambar	19
KELOMPOK MESIN	26
KELOMPOK RANGKA	50
INDEKS NOMOR PART	92
INDEKS NAMA PART	97

Cara mencari informasi part

A Mencari parts dengan “Indeks gambar”

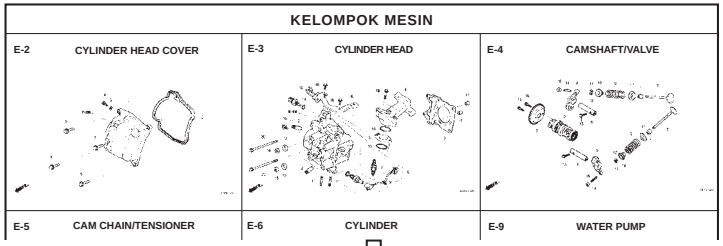

B Mencari parts dengan “Indeks nomor part”

INDEKS NOMOR PART

Nomor Part	No. Blok	Ref	Nomor Part	No. Blok	Ref	Nomor Part
13011-KWY-700	E-20	2	16015-KVY-901	E-21	4	17230-KZL-C30
13011-KWW-740	E-20	2	16016-KRP-981	E-21	5	17231-KZL-A00
13012-KVY-700	E-20	2	16016-KVB-S51	E-22	1	
13013-KVY-700	E-20	2	16028-KVB-901	E-21	6	17234-KCW-871
13014-KVY-700	E-20	2	16037-KCW-000	E-21	7	
13015-KVY-700	E-20	2	16046-KZL-A01	E-21	8	17253-KZL-A00
13021-KWW-740	E-20	2	16050-KVY-901	E-21	9	17253-KZL-C30
13031-KWW-740	E-20	2	16075-GHB-640	E-21	10	17254-KVY-900
13041-KWW-740	E-20	2	16075-KVB-S51	E-22	2	17256-KZL-A00
13051-KWW-740	E-20	2	16081-KPH-701	E-22	3	17257-KVB-900
13101-KVY-700	E-20	3	16100-KZL-A01	E-21	11	17258-KVY-900
13101-KZL-C30	E-20	3	16107-GCC-000	E-21	12	17260-KFL-D00
13102-KVY-700	E-20	3	16111-KVB-902	E-21	13	17260-KZL-A00
13102-KZL-S05	E-20	3	16119-KZL-A01	E-21	14	17260-KZL-A00
13103-KVY-700	E-20	3	16131-ZW9-801	E-21	15	17261-KVB-T00
13103-KZL-S05	E-20	3	16140-GFC-901	E-21	16	
13104-KVY-700	E-20	3	16155-KJ9-751	E-21	17	17274-KZL-A00
13104-KZL-S05	E-20	3	16163-KGF-911	E-21	18	17367-KZL-A00
13105-KVY-700	E-20	3	16165-KVB-901	E-21	19	17368-KZL-A00
13105-KZL-S05	E-20	3	16169-KVB-S51	E-22	4	17505-KZL-930
13111-Q87-001	E-20	4	16180-KGH-971	E-21	20	
13115-GN5-911	E-20	5	16190-GEE-003	E-21	21	17510-KZL-A00
14100-KZL-A00	E-4	2	16199-KZL-A01	E-21	22	17510-KZL-C00
14100-KZL-C00	E-4	18	16201-KVY-900	E-3	5	17517-GGL-J00
14125-KVY-900	E-4	3	16222-MV4-300	E-3	6	17518-GGL-J00
14126-KPH-901	E-4	4	16236-KVG-900	E-13	7	17525-KBN-900
14321-KVY-900	E-4	5	16400-KZL-C31	E-22	5	
14321-KZL-E00	E-4	5	16410-KZL-C31	E-22	6	17528-KZL-E01
14401-KVB-901	E-5	1	16423-KGH-901	E-21	23	17560-KZL-930
1443A-KVB-C30	E-4	6	16450-KVB-S51	E-22	7	17570-KZL-930
1443A-KVY-960	E-4	6	16472-KPC-D50	E-22	8	17572-GGL-J00
1444A-KVB-C30	E-4	7	16480-KVB-S51	E-22	9	17575-KZL-A00
1444A-KVY-960	E-4	7	16485-KVB-S51	E-22	10	
14461-KVB-900	E-4	8	16700-KZL-931	F-26-1	1	17577-KSS-B31
14510-KVB-901	E-5	2	16706-GGL-J01	F-26-1	2	17620-KGH-600

C Mencari parts dengan “Indeks nama part”.

INDEKS NAMA PART

Nama Part	No. Kel	Ref	Nama Part	No. Kel
BOLT, FLANGE, 5X14	E-8	6	BOLT, SETTING, 6X16	F-35
BOLT, FLANGE, 6MM	F-40	5	BOLT, SIDE STAND PIVOT	F-35
	F-24	16	BOLT, SOCKET, 5X8	F-41
BOLT, FLANGE, 6X10	E-3	13		F-41-1
BOLT, FLANGE, 6X100	E-3	21	BOLT, SOCKET, 8MM (HT)	F-17
	E-3-1	16		F-17
BOLT, FLANGE, 6X115	E-16	16	BOLT, SOCKET, 8X30 (HT)	F-17
BOLT, FLANGE, 6X12	F-24	21	BOLT, SPECIAL, 6MM	F-11
	F-41	20		F-12
	F-41-1	25	BOLT, SPECIAL, 6X18	F-28
	F-26	18		F-28-1
	F-26-1	20	BOLT, STUD, 6X12	E-3
	F-28-10	22		E-3-1
	F-5	21	BOLT, STUD, 6X28	E-3
BOLT, FLANGE, 6X14	F-41-1	26	BOLT, STUD, 6X40	E-3-1
	E-16	20	BOLT, SWITCH SETTING	F-35
	E-16	18	BOLT, TORX, 8X25	F-18
BOLT, FLANGE, 6X16	E-8	9	BOLT-WASHER, 6X10	F-24
	F-30	8	BOLT-WASHER, 6X12	F-37-10
BOLT, FLANGE, 6X18	F-28-10	23		F-39
BOLT, FLANGE, 6X20	F-41	21		F-14
	E-22	21	BOLT-WASHER, 6X13	E-3-1
	E-8	11	BOLT-WASHER, 6X18	F-41
BOLT, FLANGE, 6X22	E-16	12	BOLT-WASHER, 6X18	F-41-1
	E-22	20	BOLT-WASHER, 6X20	E-1
	E-5	10		E-1-1
	E-8	11		F-14
	F-5	22		F-4
BOLT, FLANGE, 6X25	E-1	9	BOLT-WASHER, 6X30	F-28-10
	E-1-1	11	BOLT-WASHER, 6X40	F-28
BOLT, FLANGE, 6X30	E-1-1	10		F-28-1
	F-12	17		F-24
	E-16	19	BOOT B	F-18
BOLT, FLANGE, 6X32	F-22-10	12	BOOT COMP.	F-5
	F-22-30	9	BOOT, PIN BUSH(NI)	F-18
BOLT. FLANGE. 6X35	E-12	12	BOSS. DRIVE FACE	E-16

32

E-6 **CYLINDER**

No. Blok

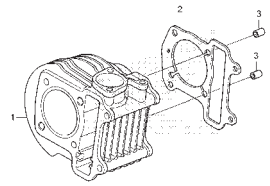

No. Ref.	L.O.N.	(Nomor ref. relatif) Deskripsi	F.R.T.

No. Ref

No. Ref.	No. Part	Deskripsi	Jumlah CW	BEAT PGM-FI CBS	SPOKE	No. Seri	Kode Parts Catalog
1	12100-KZL-930	CYLINDER COMP.	1	1	1		
2	12191-GGC-900	GASKET, CYLINDER	1	1	1		
3	90701-KFM-900	DOWEL PIN, SPECIAL, 8X14	2	2	2		

20.08.2012

No. Hal

Struktur Parts Catalog

1 3

F-20-40 **FRONT WHEEL**

2

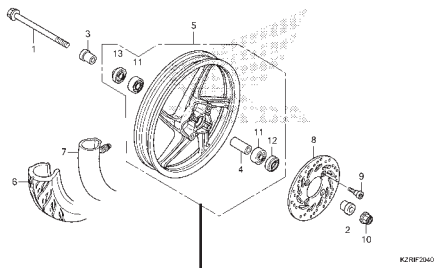

No. Ref.	L.O.N.	(Nomor ref. relatif) Deskripsi	F.R.T.
1		(12,13)	
	710151	AXLE, FRONT WHEEL	0,2
5	710104	FRONT WHEEL	0,8
6	710139	FRONT TIRE(SATU)	0,7
7	710140	TUBE, FRONT TIRE(SATU)	0,7
8	711120	DISC, FRONT BRAKE	0,3
11	710115	BEARING, FRONT WHEEL(SATU)	0,4
	710115G	.Penggantian 1 bearing tambahkan	0,1

4 5 6 7 8 9 10 11 12 13

No. Ref.	No. Part	Deskripsi	Jumlah VARIO STD	Jumlah VARIO CBS	No. Seri	Kode Parts Catalog
1	44301-KVG-950	AXLE, FR. WHEEL	1	1		
2	44311-KVB-910	COLLAR, FR. WHEEL SIDE	1	1		
3	44312-KZR-600	COLLAR, FR. WHEEL SIDE	1	1		
4	44620-KVB-910	COLLAR, FR. DISTANCE	1	1		
5	44650-KZR-600ZC	WHEEL SUB ASSY., FR.				
		NH303M MAT AXIS GRAY METALLIC	1	1		
6	44711-KVB-931	TIRE, FR.(SRI)(80/90-14 M/C 40P)	1	1		
7	44712-KZT-901	TUBE, TIRE(SRI)	1	1		
8	45351-KVB-931	DISK, FR. BRAKE(YUTAKA)	1	1		
	45351-KVB-S02	DISK, FR. BRAKE(SUNSTAR)	1	1		
9	90105-KGH-900	BOLT, BRAKE DISK, 8X24	4	4		
10	90306-KGH-901	NUT, U, 12MM	1	1		
11	91052-KVB-901	BEARING, RADIAL BALL, 6201(U) (FUJIKOSHI)	2	2		
	91052-KVB-S51	BEARING, RADIAL BALL, 6201U (NSK)	2	2		
	91052-KWB-601	BEARING, RADIAL BALL, 6201U (NTN)	2	2		
12	91251-KPH-901	DUST SEAL, 21X37X7(ARAI)	1	1		

1. **Nama Blok** 2. **Nomor Blok**
3. **Bagian yang diservis/Flat Rate Time (F.R.T.)**
4. **Nomor referensi**
   - Nomor referensi yang diberikan tanda kurung menunjukkan bahwa ia dilanjutkan dari halaman sebelumnya.
5. **Nomor part** 6. **Kode warna Honda**
7. **Deskripsi**
8. **Assembly (Susunan/rakitan)**
   - Bagian-bagian yang diberikan bingkai dengan garis-garis patah pada gambar terurai tersedia dalam rakitan lengkap. (tersedia pula dalam satuan terpisah).
9. **Deskripsi warna**
10. **Catatan**
    - Catatan ditulis dalam tanda kurung di kolom nama part.
11. **Jumlah**
    - Jumlah yang ditulis dalam tanda kurung menunjukkan part pilihan (optional part).
    - Jumlah yang ditandai dengan “N” menunjukkan part pilihan yang harus dipilih sebanyak yang diperlukan.
    - Jumlah yang diperlukan menunjukkan jumlah part yang dipakai di blok ini.
12. **Nomor seri**
13. **Kode parts catalog**
    - Jika kolom kode parts catalog kosong, berarti bahwa part berlaku untuk semua kode.

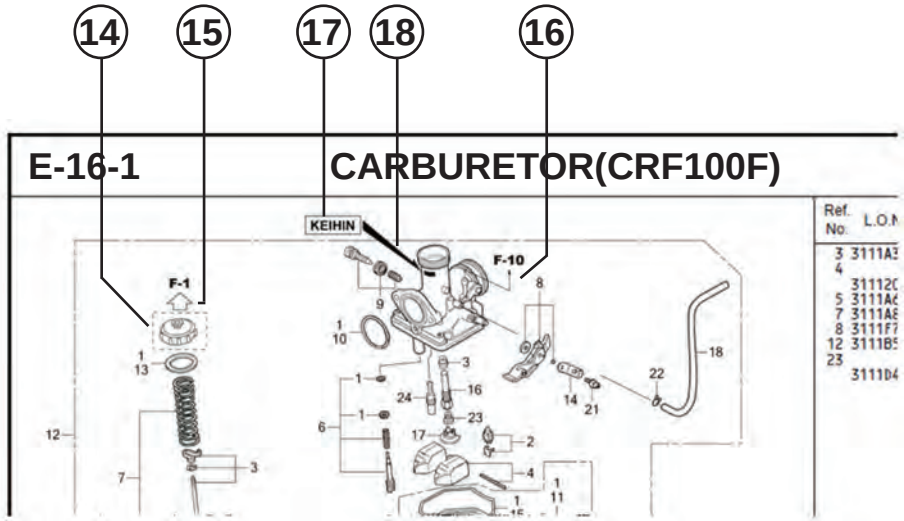

⑭ ⬚
- Part yang dikelilingi dengan garis titik-titik ⬚ dijelaskan pada blok lain.

⑮ ⇦
- Panah yang kosong di dalamnya ⇦ menunjuk ke No. blok untuk part yang dikelilingi dengan garis titik-titik ⬚ .

⑯ ←
- Panah yang padat ← menunjuk ke No. blok dimana part yang bersangkutan terhubung.

⑰ **Informasi Identifikasi Penggantian Untuk No. Part Yang Ditunjuk**

⑱ **Lokasi Informasi Identifikasi Penggantian Untuk No. Part Yang Ditunjuk**
- Jika tanda panah menunjuk ke 18, part ini tidak sesuai dengan No. Part yang berbeda.
- Pastikan untuk memesan part dari pabrikan yang sama, termasuk komponen part.
- Untuk pemesanan, indikasi No. Part termasuk simbol yang ditampilkan pada bagian yang berlaku pada part yang akan diganti.

Jika parts telah direvisi

No. Ref.	No. Part	Deskripsi	Jumlah CBR250R STD B	Jumlah CBR250R ABS B	No. Seri
1	45156-MCE-000	CLAMPER, R. FR. BRAKE HOSE ··	1	1	
2	45157-MCE-000	CLAMPER, L. FR. BRAKE HOSE ··	1	1	
3	61100-MCE-000ZA	FENDER COMP., FR. *NH411M*FORCE SILVER METALLIC	1	-	-------- -------- 3J,4J
			-	1	
	61100-MCE-000ZB	*PB284C*...CANDY PHOENIX BLUE	1	-	-------- -------- J,2J
4	61101-MCE-000	PLATE, FR. FENDER (###)·····	2	2	-------- 1008000
	61101-MCE-010	·····	2	2	1008001
5	61102-MCE-300	CUSHION, FR. FENDER ····· (BLACK)	2	2	
6	61105-MCE-000	STAY, FR. FENDER MOUNTING ···	2	2	
7	61107-MR7-000	COLLAR (6.5) ·····	4	4	
8	96001-06020-00	BOLT, FLANGE, 6X20 ·····	4	4	

Nomor telah dipakai sejak dari model pertama tanpa revisi.

Jika diperlihatkan pada sisi kiri, maka berlaku untuk model-model dari No. 1008001 dan nomor- nomor berikutnya.

Jika diperlihatkan pada sisi kanan, maka berlaku untuk model-model sampai No. 1008000.

Part yang tercantum dengan "###" pada ujung nama part mempunyai jangka waktu pemasokan terbatas (part tidak dijual).

Singkatan-singkatan yang dipakai di dalam parts catalog

- "L." atau "R." pada uraian dari sebuah part merupakan singkatan dari sisi kiri (LEFT) atau sisi kanan (RIGHT). Kiri atau kanan ditentukan seakan-akan anda sedang duduk di tempat duduk sepeda motor/skuter.

Singkatan-singkatan sebagai berikut dipakai di dalam parts catalog ini.

A ..... Ampere
ABS ..... Anti-lock brake system
A.C ..... Alternating current
A.M ..... Attaching mark
ASSY..... Assembly
C.D.I. ..... Capacitive discharge
COMP. ... Complete
D.C. ..... Direct current
EX. ..... Exhaust
FR. ..... Front
G ..... Gram
HEX. ..... Hexagonal
IN. ..... Inlet
KPH..... Kilometers per hour
L. ..... Left
L (100L) .. Link (100 Links)
L.E.D ..... Light emitted diode
MM ..... Millimeter
MPH ..... Miles per hour
R. ..... Right
RR. ..... Rear
STD. ..... Standard
T (22T) ... Tooth (22 Teeth)
TCS ..... Traction control system
T.M. ..... Transcript mark
V ..... Volt
W ..... Watt
WL ..... With labelling
WOL ..... Without labelling

Blok part dan pengecekan nomor seri

Blok part	Parts mesin E-1~	Parts throttle body E-23	Parts rangka F-1~
No seri yang diperlukan	Nomor seri mesin	Nomor seri Throttle body	Nomor seri rangka
Titik pemeriksaan	1	2	3

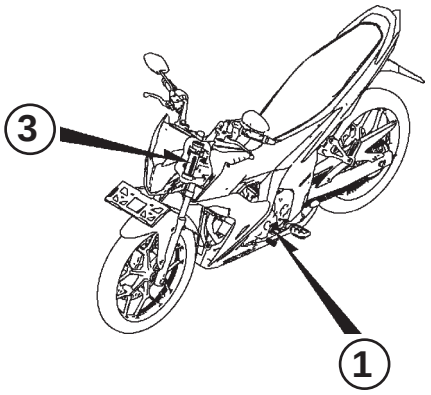

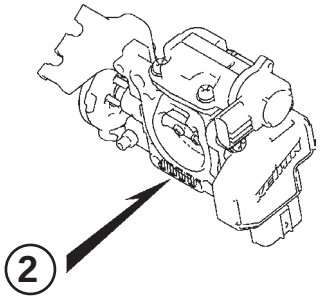

Model, kode parts catalog dan nomor seri yang berlaku

Model, kode parts catalog dan No. seri yang berlaku yang diberikan di dalam parts catalog ini dapat diidentifikasi sebagai berikut.

Nama	Tipe	Model	No. Seri Mesin yang berlaku	No. Seri Rangka yang berlaku	No. identifikasi throttle body yang berlaku
SONIC 150R	REPSOL	FS150RG	KB11E0000001~	MH1KB11**FK000001~	GQ1LA A
	STANDARD				

* Dari nomor identifikasi karburator/throttle body, hanya bagian yang digaris bawahi di bawah ini yang dipakai untuk registrasi.

GQ1LA A KC ア

Tabel warna

- Ketika memesan part berwarna, bacalah tabel di bawah ini dan gunakan nomor part yang terdiri dari nomor part dasar yang bersangkutan yang telah ditambahkan kode warna part.

No.	MODEL		TIPE REPSOL (FS150RG)				
	WARNA		Nitric orange YR271	Model yang berlaku		No. blok yang berlaku	No. Ref.
	Nama parts berwarna	No. dasar part		Model pertama yg berlaku	Model akhir yang berlaku		
1	BRIDGE, FORK TOP	53230-K56-N00	ZA			F-7	10
2	COVER ASSY., COMBINATION LIGHT LOWER	6470A-K56-N00	-			F-23-10	4
3	COVER, L. BODY	83620-K56-N00	RSW			F-23-10	7
4	COVER, L. SIDE UPPER	64440-K56-N00	NOR			F-24	8
5	COVER, R. BODY	83610-K56-N00	RSW			F-23-10	6
6	COVER, R. SIDE UPPER	64340-K56-N00	NOR			F-24	3
7	COWL ASSY., FR. CENTER	6130B-K56-N00	-			F-43	1
8	COWL, L. FR. SIDE	61303-K56-N00	NOR			F-43	10
9	COWL, L. SIDE LOWER	64420-K56-N00	RSW			F-24	7
10	COWL, R. FR. SIDE	61302-K56-N00	NOR			F-43	5
11	COWL, R. SIDE LOWER	64320-K56-N00	RSW			F-24	2
12	COWL, FR. UNDER	61304-K56-N00	ZD			F-43	4
13	FENDER A, FR.	61100-K56-N00	FMB			F-10	1
14	GRIP, RR.	50400-K56-N00	ZA			F-23	2
15	STRIPE SET, L.	871X0-K56-N20	ZAL			F-50-1	2
16	STRIPE SET, R.	871X0-K56-N20	ZAR			F-50-1	1
17	SWINGARM ASSY., RR.	5210A-K56-N00	-			F-32	8
18	WHEEL, FR.	44601-K56-N00	ZA			F-14-40	6
19	WHEEL, RR.	42601-K56-N00	ZA			F-19-40	9

No.	MODEL		TIPE STANDARD (FS150RG)							
	WARNA		Black	Ross white	Winning red	Space magenta metallic	Model yang berlaku		No kelompok yang berlaku	No Ref.
	Nama parts berwarna	No. dasar part	NH1	NH196	R258	RP195	Model pertama yg berlaku	Model akhir yang berlaku		
1	BRIDGE, FORK TOP	53230-K56-N00	ZA	ZA	ZA	ZA			F-7	10
2	COVER ASSY., COMBINATION LIGHT LOWER	6470A-K56-N00	-	-	-	-			F-23-10	4
3	COVER, L. BODY	83620-K56-N00	FMB	RSW	WRD	SMM			F-23-10	7
4	COVER, L. SIDE UPPER	64440-K56-N00	FMB	RSW	WRD	SMM			F-24	8
5	COVER, R. BODY	83610-K56-N00	FMB	RSW	WRD	SMM			F-23-10	6
6	COVER, R. SIDE UPPER	64340-K56-N00	FMB	RSW	WRD	SMM			F-24	3
7	COWL ASSY., FR. CENTER	6130B-K56-N00	-	-	-	-			F-43	1
8	COWL, L. SIDE LOWER	64420-K56-N00	FMB	RSW	WRD	SMM			F-24	7
9	COWL, R. SIDE LOWER	64320-K56-N00	FMB	RSW	WRD	SMM			F-24	2
10	COWL, FR. UNDER	61304-K56-N00	ZC	ZD	ZA	ZB			F-43	4
11	COWL, L. FR. SIDE	61303-K56-N00	ZE	ZD	ZB	ZC			F-43	3
12	COWL, R. FR. SIDE	61302-K56-N00	ZE	ZD	ZB	ZC			F-43	2
13	FENDER A, FR.	61100-K56-N00	FMB	RSW	WRD	SMM			F-10	1
14	GRIP, RR.	50400-K56-N00	ZB	ZB	ZB	ZB			F-23	2
15	STRIPE SET, L.	871X0-K56-N00	ZAL	ZBL	ZCL	ZDL			F-50	2
16	STRIPE SET, R.	871X0-K56-N00	ZAR	ZBR	ZCR	ZDR			F-50	1
17	SWINGARM ASSY., RR.	5210A-K56-N00	ZA	ZA	ZA	ZA			F-32	8
18	WHEEL, FR.	44601-K56-N00	ZB	ZB	ZB	ZB			F-14-40	6
19	WHEEL, RR.	42601-K56-N00	ZB	ZB	ZB	ZB			F-19-40	9

Selang bahan bakar, selang untuk keperluan umum dan selang vinyl

- Selang bahan bakar, selang pemakaian umum dan selang vinyl yang standard dapat diganti dengan part borongan yang dijual dalam bentuk gulungan.
- Sewaktu memesan part pengganti untuk selang bahan bakar, selang pemakaian umum dan selang vinyl yang standard, pakailah nomor part borongan yang dicantumkan pada parts catalog dalam tanda kurung ( ) di bawah nama part, atau pakailah catalog di bawah.
  (Panjang standard part borongan adalah 1 m, akan tetapi, yang dicantumkan di dalam catalog dengan < > tersedia dalam panjang 3 m dan 8 m)
- Sewaktu akan memasang selang borongan pengganti, potong dalam panjang yang sama seperti pada part standard.
  (Untuk cara pemotongan part borongan, dan cara pemesanan dsb., bacalah manual servis dan instruksi yang diberikan pada part borongan)
- Daftar di bawah adalah catalog dari nomor part standard dan nomor part borongan. Perhatikan bahwa nomor-nomor itu hanya berlaku untuk part pengganti yang terdaftar saja.

Selang/Pipa bahan bakar			
No part standard	No. part borongan	Part borongan	
		Diameter dalam (mm)	Panjang (m)
95001-30xxx-2x	95001-30001-20M	3,0	1
95001-30xxx-3x	95001-30001-30M	3,0	1
95001-30xxx-4x	95001-30001-40M	3,0	1
95001-35xxx-2x	95001-35001-50M <95001-35003-50M>	3,5	1 3
95001-35xxx-3x	95001-35001-60M <95001-35003-60M>	3,5	1
95001-35xxx-4x	95001-35001-60M <95001-35003-60M>	3,5	1 3
95001-35xxx-5x	95001-35001-50M <95001-35003-50M>	3,5	1 3
95001-35xxx-6x	95001-35001-60M <95001-35003-60M>	3,5	1 3
95001-45xxx-2x	95001-45001-50M <95001-45003-50M>	4,5	1 3
95001-45xxx-3x	95001-45001-60M <95001-45003-60M> <95001-45008-60M>	4,5	1 3 8
95001-45xxx-4x	95001-45001-60M <95001-45003-60M> <95001-45008-60M>	4,5	1 3 8
95001-45xxx-5x	95001-45001-50M <95001-45003-50M>	4,5	1 3
95001-45xxx-6x	95001-45001-60M <95001-45003-60M> <95001-45008-60M>	4,5	1 3 8
95001-55xxx-2x	95001-55001-50M <95001-55003-50M> <95001-55008-50M>	5,5	1 3 8

Selang/Pipa bahan bakar			
No part standard	No. part borongan	Part borongan	
		Diameter dalam (mm)	Panjang (m)
95001-55xxx-3x	95001-55001-60M <95001-55003-60M> <95001-55008-60M>	5,5	1 3 8
95001-55xxx-4x	95001-55001-60M <95001-55003-60M> <95001-55008-60M>	5,5	1 3 8
95001-55xxx-5x	95001-55001-50M <95001-55003-50M> <95001-55008-50M>	5,5	1 3 8
95001-55xxx-6x	95001-55001-60M <95001-55003-60M> <95001-55008-60M>	5,5	1 3 8
95001-75xxx-2x	95001-75001-50M <95001-75003-50M>	7,5	1 3
95001-75xxx-3x	95001-75001-60M <95001-75003-60M> <95001-75008-60M>	7,5	1 3 8
95001-75xxx-4x	95001-75001-60M <95001-75003-60M> <95001-75008-60M>	7,5	1 3 8
95001-75xxx-5x	95001-75001-50M <95001-75003-50M>	7,5	1 3
95001-75xxx-6x	95001-75001-60M <95001-75003-60M> <95001-75008-60M>	7,5	1 3 8
95001-80xxx-2x	95001-80001-50M	8,0	1
95001-80xxx-3x	95001-80001-60M	8,0	1
95001-80xxx-4x	95001-80001-60M	8,0	1
95001-80xxx-5x	95001-80001-50M	8,0	1
95001-80xxx-6x	95001-80001-60M	8,0	1

Pipa vinyl				
No part standard	No. part borongan	Part borongan		
		Diameter dalam (mm)	Diameter dalam (mm)	Panjang (m)
95003-01xxx-3x	95003-01001-60M <95003-01003-60M>	2,9	6,8	1 3
95003-01xxx-60	95003-01001-60M <95003-01003-60M>	2,9	6,8	1 3
95003-03xxx-3x	95003-03001-60M <95003-03003-60M>	3,0	6,0	1 3
95003-03xxx-60	95003-03001-60M <95003-03003-60M>	3,0	6,0	1 3
95003-05xxx-3x	95003-05001-60M <95003-05003-60M> <95003-05008-60M>	3,5	6,5	1 3 8
95003-05xxx-60	95003-05001-60M <95003-05003-60M> <95003-05008-60M>	3,5	6,5	1 3 8
95003-07xxx-1x	95003-07001-10M <95003-07003-10M> <95003-07008-10M>	4,0	7,0	1 3 8
95003-07xxx-20	95003-07001-10M <95003-07003-10M> <95003-07008-10M>	4,0	7,0	1 3 8
95003-07xxx-3x	95003-07001-60M <95003-07003-60M> <95003-07008-60M>	4,0	7,0	1 3 8
95003-07xxx-60	95003-07001-60M <95003-07003-60M> <95003-07008-60M>	4,0	7,0	1 3 8
95003-07xxx-7x	95003-07001-70M <95003-07003-70M> <95003-07008-70M>	4,0	7,0	1 3 8
95003-08xxx-1x	95003-08001-10M <95003-08003-10M> <95003-08008-10M>	4,5	6,5	1 3 8
95003-09xxx-3x	95003-09001-60M <95003-09003-60M>	4,5	8,0	1 3
95003-09xxx-60	95003-09001-60M <95003-09003-60M>	4,5	8,0	1 3
95003-10xxx-1x	95003-10001-10M <95003-10003-10M>	5,0	8,0	1 3
95003-10xxx-20	95003-10001-10M <95003-10003-10M>	5,0	8,0	1
95003-10xxx-3x	95003-10001-60M <95003-10003-60M>	5,0	8,0	1 3
95003-10xxx-60	95003-10001-60M <95003-10003-60M>	5,0	8,0	1 3
95003-11xxx-3x	95003-11001-60M <95003-11003-60M> <95003-11008-60M>	5,0	9,0	1 3 8
95003-11xxx-60	95003-11001-60M <95003-11003-60M> <95003-11008-60M>	5,0	9,0	1 3 8
95003-12xxx-1x	95003-12001-10M <95003-12003-10M> <95003-12008-10M>	5,0	7,0	1 3 8
95003-12xxx-20	95003-12001-10M <95003-12003-10M> <95003-12008-10M>	5,0	7,0	1 3 8

Pipa vinyl				
No part standard	No. part borongan	Part borongan		
		Diameter dalam (mm)	Diameter dalam (mm)	Panjang (m)
95003-14xxx-1x	95003-14001-10M <95003-14003-10M>	6,0	9,0	1 3
95003-14xxx-20	95003-14001-10M <95003-14003-10M>	6,0	9,0	1 3
95003-14xxx-3x	95003-14001-60M <95003-14003-60M>	6,0	9,0	1 3
95003-17xxx-1x	95003-17001-10M <95003-17003-10M>	7,0	9,0	1 3
95003-19xxx-1x	95003-19001-10M <95003-19003-10M> <95003-19008-10M>	7,0	11,0	1 3 8
95003-19xxx-20	95003-19001-10M <95003-19003-10M> <95003-19008-10M>	7,0	11,0	1 3 8
95003-19xxx-3x	95003-19001-60M <95003-19003-60M> <95003-19008-60M>	7,0	11,0	1 3 8
95003-19xxx-60	95003-19001-60M <95003-19003-60M> <95003-19008-60M>	7,0	11,0	1 3 8
95003-21xxx-1x	95003-21001-10M <95003-21003-10M>	8,0	9,0	1
95003-21xxx-20	95003-21001-10M <95003-21003-10M>	6,0	9,0	1 3
95003-23xxx-1x	95003-23001-10M <95003-23003-10M>	8,0	12,0	1 3
95003-23xxx-20	95003-23001-10M <95003-23003-10M>	8,0	12,0	1 3
95003-23xxx-3x	95003-23001-60M <95003-23003-60M> <95003-23008-60M>	8,0	12,0	1 3 8
95003-23xxx-60	95003-23001-60M <95003-23003-60M> <95003-23008-60M>	8,0	12,0	1 3 8
95003-25xxx-1x	95003-25001-10M <95003-25003-10M>	9,0	11,0	1 3
95003-25xxx-20	95003-25001-10M <95003-25003-10M>	9,0	11,0	1 3
95003-25xxx-3x	95003-25001-60M <95003-25003-60M>	9,0	11,0	1 3
95003-25xxx-7x	95003-25001-70M <95003-25003-70M>	9,0	11,0	1 3
95003-27xxx-1x	95003-27001-10M <95003-27003-10M>	9,0	13,0	1 3
95003-27xxx-20	95003-27001-10M <95003-27003-10M>	9,0	13,0	1 3
95003-27xxx-3x	95003-27001-60M <95003-27003-60M>	9,0	13,0	1 3
95003-27xxx-60	95003-27001-60M <95003-27003-60M>	9,0	13,0	1 3
95003-33xxx-1x	95003-33001-10M <95003-33003-10M>	10,0	14,0	1 3
95003-33xxx-20	95003-33001-10M <95003-33003-10M>	10,0	14,0	1 3

Pipa vinyl				
No part standard	No. part borongan	Part borongan		
		Diameter dalam (mm)	Diameter dalam (mm)	Panjang (m)
95003-36xxx-1x	95003-36001-10M <95003-36003-10M> <95003-36008-10M>	11,0	13,0	1 3 8
95003-36xxx-20	95003-36001-10M <95003-36003-10M> <95003-36008-10M>	11,0	13,0	1 3 8
95003-37xxx-3x	95003-37001-60M 95003-37003-60M>	11,0	15,0	1 3
95003-37xxx-60	95003-37001-60M <95003-37003-60M>	11,0	15,0	1 3
95003-38xxx-1x	95003-38001-10M <95003-38003-10M>	12,0	13,0	1 3
95003-38xxx-20	95003-38001-10M <95003-38003-10M>	12,0	13,0	1 3
95003-39xxx-1x	95003-39001-10M <95003-39003-10M>	12,0	14,0	1 3
95003-39xxx-20	95003-39001-10M <95003-39003-10M>	12,0	14,0	1 3
95003-40xxx-20	95003-40001-10M <95003-40003-10M>	12,0	16,0	1 3
95003-40xxx-3x	95003-40001-60M <95003-40003-60M>	12,0	16,0	1 3
95003-40xxx-60	95003-40001-60M <95003-40003-60M>	12,0	16,0	1 3
95003-43xxx-1x	95003-43001-10M <95003-43003-10M> <95003-43008-10M>	13,0	15,0	1 3 8
95003-43xxx-20	95003-43001-10M <95003-43003-10M> <95003-43008-10M>	13,0	15,0	1 3 8
95003-45xxx-1x	95003-45001-10M <95003-45003-10M> <95003-45008-10M>	14,0	18,0	1 3 8
95003-45xxx-20	95003-45001-10M <95003-45003-10M> <95003-45008-10M>	14,0	18,0	1 3 8
95003-50xxx-1x	95003-50001-10M <95003-50003-10M>	16,0	19,0	1 3
95003-50xxx-20	95003-50001-10M <95003-50003-10M>	16,0	19,0	1 3
95003-50xxx-3x	95003-50001-60M <95003-50003-60M>	16,0	19,0	1 3
95003-55xxx-1x	95003-55001-10M <95003-55003-10M>	17,5	20,5	1 3
95003-55xxx-20	95003-55001-10M <95003-55003-10M>	17,5	20,5	1 3
95003-60xxx-1x	95003-60001-10M <95003-60003-10M>	22,0	27,0	1 3
95003-60xxx-20	95003-60001-10M <95003-60003-10M>	22,0	27,0	1 3
95003-60xxx-3x	95003-60001-60M <95003-60003-60M>	22,0	27,0	1 3
95003-60xxx-60	95003-60001-60M <95003-60003-60M>	22,0	27,0	1 3

Selang pemakaian umum			
No part standard	No. part borongan	Part borongan	
		Diameter dalam (mm)	Panjang (m)
95005-11xxx-3x	95005-11001-30M	11,0	1
95005-11xxx-5x	95005-11001-50M	11,0	1
95005-12xxx-1x	95005-12001-10M <95005-12003-10M>	12,0	1 3
95005-12xxx-2x	95005-12001-20M	12,0	1
95005-12xxx-3x	95005-12001-30M	12,0	1
95005-12xxx-5x	95005-12001-50M	12,0	1
95005-14xxx-1x	95005-14001-10M	14,0	1
95005-14xxx-2x	95005-14001-20M <95005-14003-20M>	14,0	1 3
95005-14xxx-3x	95005-14001-30M	14,0	1
95005-14xxx-5x	95005-14001-50M	14,0	1
95005-17xxx-1x	95005-17001-10M	17,0	1
95005-17xxx-2x	95005-17001-20M	17,0	1
95005-17xxx-3x	95005-17001-30M	17,0	1
95005-17xxx-5x	95005-17001-50M	17,0	1
95005-30xxx-3x	95005-30001-30M	3,0	1
95005-30xxx-5x	95005-30001-50M	3,0	1
95005-35xxx-1x	95005-35001-10M <95005-35003-10M> <95005-35008-10M>	3,5	1 3 8
95005-35xxx-2x	95005-35001-20M	3,5	1
95005-35xxx-3x	95005-35001-30M	3,5	1
95005-35xxx-4x	95005-35001-10M <95005-35003-10M> <95005-35008-10M>	3,5	1 3 8
95005-35xxx-5x	95005-35001-50M	3,5	1
95005-45xxx-1x	95005-45001-10M <95005-45003-10M> <95005-45008-10M>	4,5	1 3 8
95005-45xxx-2x	95005-45001-20M	4,5	1
95005-45xxx-3x	95005-45001-30M	4,5	1

Selang pemakaian umum			
No part standard	No. part borongan	Part borongan	
		Diameter dalam (mm)	Panjang (m)
95005-45xxx-4x	95005-45001-10M <95005-45003-10M> <95005-45008-10M>	4,5	1 3 8
95005-45xxx-5x	95005-45001-50M	4,5	1
95005-50xxx-3x	95005-50001-30M <95005-50003-30M>	5,0	1 3
95005-50xxx-5x	95005-50001-50M	5,0	1
95005-55xxx-1x	95005-55001-10M <95005-55003-10M> <95005-55008-10M>	5,3	1 3 8
95005-55xxx-2x	95005-55001-20M <95005-55003-20M>	5,3	1 3
95005-55xxx-4x	95005-55001-10M <95005-55003-10M> <95005-55008-10M>	5,3	1 3 8
95005-65xxx-1x	95005-65001-10M <95005-65003-10M>	6,5	1 3
95005-65xxx-2x	95005-65001-20M	6,5	1
95005-70xxx-3x	95005-70001-30M <95005-70003-30M>	7,0	1 3
95005-70xxx-5x	95005-70001-50M	7,0	1
95005-75xxx-1x	95005-75001-10M <95005-75003-10M>	7,3	1 3
95005-75xxx-2x	95005-75001-20M	7,3	1
95005-80xxx-1x	95005-80001-10M <95005-80003-10M>	8,0	1 3
95005-80xxx-2x	95005-80001-20M	8,0	1
95005-80xxx-3x	95005-80001-30M	8,0	1
95005-80xxx-5x	95005-80001-50M	8,0	1
95005-91xxx-3x	95005-91001-30M	12,0	1
95005-91xxx-5x	95005-91001-50M	12,0	1
95005-92xxx-3x	95005-92001-30M	12,0	1
95005-92xxx-5x	95005-92001-50M	12,0	1

CATATAN: X ditampilkan untuk mewakili angka yang dihilangkan dan huruf-huruf alfabet romawi.

HATI-HATI : BERBAHAYA sekali apabila selang bahan bakar tertukar dengan selang pemakaian umum atau selang vinyl.
Jangan sekali-kali menggunakan selang pemakaian umum atau selang vinyl sebagai pengganti selang bahan bakar atau sebaliknya. Selalu pakai nomor part borongan yang tepat pada parts catalog, mengikuti service manual atau instruksi-instruksi yang menyertai part borongan.

- **Nomor part borongan untuk selang bahan bakar, selang pemakaian umum dan selang vinyl.**

(Contoh)

9 5 0 0 1- 7 5 0 0 1- 5 0 M

Nomor part borongan: Menunjuk ke part borongan.

Kode penandaan (tipe selang): (selang bahan bakar dan selang pemakaian umum).

Ubah kode (untuk selang tambahan): (Selang vinyl)

- Menunjukkan tanda nomor atau urutan perubahan, namun, kode untuk part borongan harus benar- benar 0 (nol).

Tipe kode:

Selang bahan bakar
- 2: Kepangan merah di luar (dia. dalam 3 mm saja)
- 5: Kepangan hitam di dalam
- 3: Merah (dia. dalam 3 mm saja)
- 4: Abu-abu dengan garis merah (dia. dalam 3 mm saja)
- 6: Hitam

• Selang vinyl
- 1: Tembus pandang
- 2: Hitam
- 3: Merah muda
- 6: Merah muda
- 7: Hitam pucat

• Selang umum
- 1: Abu-abu
- 2: Abu-abu
- 3: Hitam
- 5: Hitam

Panjang:
- 001: 1 m (standard)
- 003: 3 m
- 008: 8 m

Kode D.D.: (selang bahan bakar dan selang pemakaian umum)

- 30: 3,0 mm
- 35: 3,5 mm
- 45: 4,5 mm
- 50: 5,0 mm
- 55: 5,3 mm, 5,5 mm
- 65: 6,5 mm
- 70: 7,0 mm
- 75: 7,3 mm, 7,5 mm
- 80: 8,0 mm
- 11: 11 mm
- 91: 12 mm (dia. luar 15) mm
- 92: 12 mm (dia. luar 16) mm
- 12: 12 mm (dia. luar 17) mm
- 14: 14 mm
- 17: 17 mm

Kode DD./DL.: (selang vinyl)

01: ID. 2,9	OD. 6,8 mm	14: ID. 6,0	OD. 9,0 mm	37: ID. 11,0	OD. 15,0 mm
03: ID. 3,0	OD. 6,0 mm	17: ID. 7,0	OD. 9,0 mm	38: ID. 12,0	OD. 13,0 mm
05: ID. 3,5	OD. 6,5 mm	19: ID. 7,0	OD. 11,0 mm	39: ID. 12,0	OD. 14,0 mm
07: ID. 4,0	OD. 7,0 mm	21: ID. 8,0	OD. 9,0 mm	40: ID. 12,0	OD. 16,0 mm
08: ID. 4,5	OD. 6,5 mm	23: ID. 8,0	OD. 12,0 mm	43: ID. 13,0	OD. 15,0 mm
09: ID. 4,5	OD. 8,0 mm	25: ID. 9,0	OD. 11,0 mm	45: ID. 14,0	OD. 18,0 mm
12: ID. 5,0	OD. 7,0 mm	27: ID. 9,0	OD. 13,0 mm	50: ID. 16,0	OD. 19,0 mm
10: ID. 5,0	OD. 8,0 mm	33: ID. 10,0	OD. 14,0 mm	55: ID. 17,5	OD. 20,5 mm
11: ID. 5,0	OD. 9,0 mm	36: ID. 11,0	OD. 13,0 mm	60: ID. 22,0	OD. 27,0 mm

Tipe selang:
- 1: Selang bahan bakar
- 3: Selang vinyl
- 5: Selang umum

FLAT RATE SERVICE TIME

Flat rate service time (FRT) adalah waktu standard yang diperlukan untuk menyervis sebuah sepeda motor/skuter, yang terdaftar di dalam parts catalog ini untuk membantu AHASS mengontrol proses kerja yang sesungguhnya dan menghitung biaya servis dengan memakai FRT sebagai patokan.

Sistem penentuan FRT

- Waktu servis sesungguhnya
  - Pelepasan, Pembongkaran/perakitan kembali, Pemasangan
  - Pemeriksaan, Pengukuran, Penyetelan, Konfirmasi
  - Pendiagnosaan/troubleshooting (Sistem kelistrikan)
  - Pemeriksaan akhir
- Waktu jeda
  - Persiapan
    (Pemeriksaan proses, Konfirmasi penyusunan tools yang diperlukan).
  - Pekerjaan yang berhubungan (Pemindahan kendaraan).

* Waktu jeda ditentukan dengan mengalikan waktu servis sesungguhnya dengan koefisien tertentu.

Metode Penulisan

Bagian-bagian yang diservis yang diperlihatkan di dalam teks yang tercantum dengan waktu pekerjaan part-part yang diganti sebagai subyeknya. Bagian-bagian lain yang diservis yang tidak menggunakan penggantian parts (pelepasan/pemasangan, penyetelan, pemeriksaan/pengukuran, dan pekerjaan lain) tercantum secara bersama pada bagian pendahuluan yang digolongkan menurut jenis pekerjaan.

Standard penentuan FRT

- Sistem desimal (dalam satuan 0,1) dipakai untuk menentukan FRT oleh karena mudah untuk menghitung upah.
  Contoh: (0,1) ➔ 6 menit, (0,2) ➔ 12 menit
  [Ongkos jasa per jam] x [FRT] = [Upah]
- FRT ditentukan dengan tool (perkakas) tangan.
- Bagian-bagian yang diservis dan FRT dapat berubah tergantung pada pengembangan tools dan peralatan servis serta perbaikan pada prosedur servis.

Prosedur kerja

- Oleh karena prosedur kerja ditentukan berdasarkan waktu kerja dengan metode kerja yang diuraikan di dalam Buku Pedoman Reparasi, pakailah Buku ini sebagai pegangan.
- Pekerjaan servis yang memerlukan waktu singkat harus tetap memperhatikan keamanan pekerjaan dan garansi dari sepeda motor/skuter dalam penentuan bagian-bagian yang diservis yang tidak dimuat di dalam Buku Pedoman Reparasi.
- Pada dasarnya pekerjaan dilakukan oleh satu orang, dan apabila diperlukan dua atau lebih orang untuk mengerjakannya, penentuan waktu kerja dilakukan sebagai waktu total untuk sejumlah orang tersebut.
- Nilai yang ditentukan untuk tingkat kemampuan seorang pekerja adalah tiga tahun pengalaman dalam perbaikan kendaraan-kendaraan Honda sebagai standard.
- Special tools dan peralatan servis yang dipakai dalam penentuan FRT adalah yang ditentukan atau dianjurkan di dalam Buku Pedoman Reparasi.

Bagian yang diservis yang tidak ada FRTnya

- Aksesori dan parts yang diservis yang tidak terdaftar di dalam parts catalog ini.
- Lokasi-lokasi yang mengalami sedikit sekali pemburukan kondisi atau kerusakan dalam pemakaian normal.
- Pekerjaan servis yang dapat diselesaikan dengan sekali sentuh.
- Pekerjaan servis yang jarang sekali dilakukan (yaitu yang jarang sekali mengalami masalah dan frekuensi servis).

* Jika FRT tidak tercantum, hitunglah upah kerja berdasarkan perkiraan waktu kerja sesungguhnya.

Pekerjaan yang tidak ada FRTnya

- Pembuangan oli dan cairan coolant, Waktu tunggu untuk pemanasan mesin dan sebagainya.
- Pekerjaan tambahan yang meliputi pelepasan/pemasangan perlengkapan luar yang standard.
- Waktu tidak langsung untuk melakukan servis dengan mendatangi pembeli sepeda motor/skuter, tukar tambah, dan pengiriman sepeda motor/skuter.
- Waktu tidak langsung yang diperlukan untuk pemesanan dan penyerahan parts.
- Ongkos untuk bahan perekat, grease, dsb. yang dipakai untuk pekerjaan servis.

Penjelasan FRT dengan menggunakan contoh

(Contoh mungkin berbeda dari item yang tercantum)

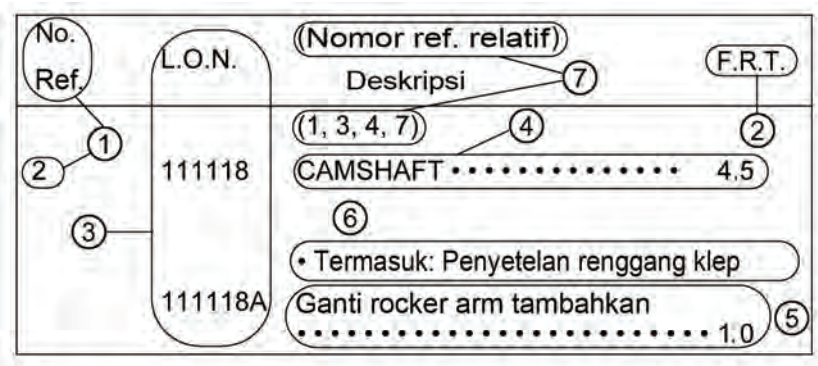

① No. Referensi dari gambar part yang menunjukkan lokasi kerja untuk penggantian.

② FRT adalah singkatan dari Flat Rate Time menunjukkan waktu servis standard yang dibutuhkan untuk penggantian.

③ LON adalah singkatan dari Labor Operation Number, yaitu klasifikasi dari item servis dengan kode unit kerja.

Kode kerja yang sama digunakan tidak tergantung dari model.

Pengerjaan standard ditandai dengan kode 6 digit, dan pengerjaan tambahan ditandai dengan kode 7 digit.

④ Menyatakan penggantian camshaft dan FRT4,5.

⑤ Menyatakan bahwa FRT1,0 akan ditambahkan jika pekerjaan tambahan (penggantian rocker arm) dilakukan sehubungan dengan penggantian camshaft.

⑥ Menyatakan isi pekerjaan yang termasuk di dalam bagian yang diservis.

⑦ Menyatakan No. referensi yang pekerjaan dan waktunya adalah sama dengan FRT4,5 untuk camshaft.

(Daerah jangkauan aplikasi terbatas pada bagian-bagian yang diservis tanpa penentuan LON di dalam blok yang sama)

Cara mencari bagian yang diservis dengan memakai contoh
(penggantian camshaft)

Buka ke halaman blok dimana gambar spare part camshaft diperlihatkan.

Carilah gambar camshaft, dan carilah bagian yang diservis dan FRT yang sesuai dengan No. referensi.

Tanda penunjuk untuk pencantuman bagian-bagian yang diservis yang terdapat lanjutan pada halaman berikutnya

No. Ref.	L.O.N.	(Nomor ref. relatif) Deskripsi	F.R.T.
2	**111118**	**CAMSHAFT** • • • • • • • • • • • • • • •	**4,5**
	•	•	•
	•	•	•
+			

Tanda yang diperlihatkan pada baris terakhir.

Blok yang tidak ada penentuan FRT

No. Ref.	L.O.N.	(Nomor ref. relatif) Deskripsi	F.R.T.
TIDAK ADA INFORMASI			

- **Sistem kode LON**

1	11	1	18	A
a	b	c	d	e

a) Kode golongan ..... Mesin

b) Kode lokasi/fungsi ..... Bagian atas mesin

c) Kode pekerjaan ..... Ganti

d) Nomor urutan pekerjaan (Kode unit dapat diperlihatkan dengan abjad)
..... camshaft
(Tidak ada aturan kode tetap)

e) Kode tambahan .....Ganti rocker arm
(Tidak ada aturan kode tetap)

1	11	1	18	A
a		c		

a) Kode kategori dan klasifikasi

Kode	Kategori
1	Mesin
2	Transmisi
3	Bahan bakar & Pembuangan gas
4	Rangka & Badan
5	Kemudi/Suspensi
6	Kelistrikan
7	Roda/Rem
8	Alat pengontrol/instrumen
9	-
0	-

c) Kode pekerjaan dan klasifikasi

Kode	Kategori pekerjaan
1	Ganti, Pelepasan/Pemasangan, Ganti
2	Overhaul
3	Setel, Balans
4	(Pekerjaan yang berhubungan dengan pengecatan: Lapisan-atas)
5	Test, Pemeriksaan/diagnosa, Pengukuran, Pemeriksaan
6	(Pekerjaan yang berhubungan dengan overhaul: Rebore = korter)
7	(Pekerjaan yang berhubungan dengan overhaul: Reseal = perapatan kembali)
8	(Resurface = Pembentukan kembali permukaan)
9	(Pekerjaan yang berhubungan dengan pengecatan: Refinish = perhalus permukaan)
0	Perbaikan, Pembersihan, Pembuangan angin palsu

Bagian utama yang diservis tanpa memakai spare parts
Pelepasan/Pemasangan, Penyetelan, Pemeriksaan/Pengukuran, Pekerjaan lain
E: Mesin, F: Rangka

*** PEKERJAAN LAIN SELAIN PENGGANTIAN PARTS**

- **Pelepasan/Pemasangan**

  Set untuk konfigurasi dengan parts dilepaskan dari kendaraan.

	LON	DESKRIPSI	FRT
E	1101E5	**MEMIRINGKAN ASSY., MESIN-PELEPASAN/PEMASANGAN** TERMASUK: Semua penyetelan yang diperlukan	2,9
	3111D5	**ASSY., THROTTLE BODY-PELEPASAN/PEMASANGAN**	0,8
	1101E6	**PEMISAHAN CRANKCASE** TERMASUK: Penurunan dan pemasangan mesin	5,3
F	1151E6	**RADIATOR ASSEMBLY-PELEPASAN/PEMASANGAN**	0,8

- **Penyetelan**

	LON	DESKRIPSI	FRT
E	2123A0	**KOPLING- PENYETELAN** TERMASUK: Penyetelan tuas kopling	0,1
	6143A1	**BUSI-PENYETELAN/PEMBERSIHAN**	0,6
	1113A0	**JARAK RENGGANG KLEP-PENYETELAN** CATATAN: Untuk 1 kendaraan	1,2
F	6163A0	**LAMPU DEPAN - MENGARAHKAN**	0,1
	2133A0	**RANTAI RODA - PENYETELAN**	0,1
	7103A1	**RODA DEPAN - BALANCING**	0,5
	3113A3	**PENGOPERASIAN GAS - PENYETELAN**	0,1

- **Pemeriksaan/Pengukuran**

	LON	DESKRIPSI	FRT
E	1115A0	**TEKANAN KOMPRESSI-PENGUKURAN**	0,7
	6145A0	**WAKTU PENGAPIAN- PEMERIKSAAN**	0,2
F	6105A0	**BATTERY - PEMERIKSAAN TINGGI PERMUKAAN ELECTROLYTE & PENGISIAN MUATAN LISTRIK**	0,2

- **Pekerjaan lain**

	LON	DESKRIPSI	FRT
E	1130A1	**SARINGAN KASA OLI- PEMBERSIHAN**	1,1
F	7110A0	**REM DEPAN-PEMBUANGAN ANGIN PALSU**	0,2
	7110A1	**REM BELAKANG-PEMBUANGAN ANGIN PALSU**	0,2
	1151E7	**RADIATOR COOLANT-GANTI**	0,3

KELOMPOK MESIN

E-1 CYLINDER HEAD COVER

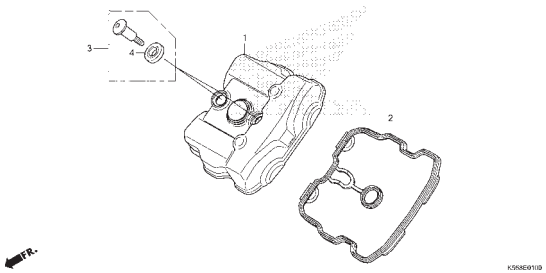

E-2 CYLINDER HEAD

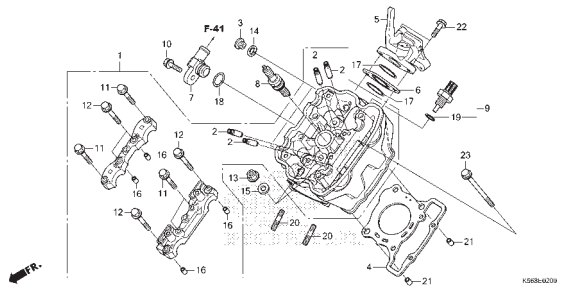

E-3 CAMSHAFT/VALVE

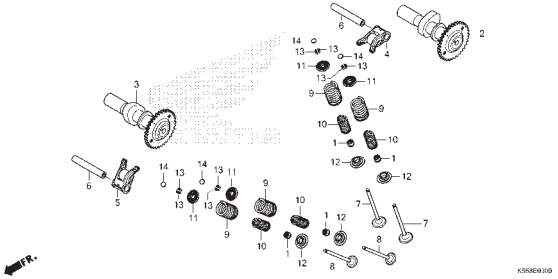

E-4 CAM CHAIN/TENSIONER

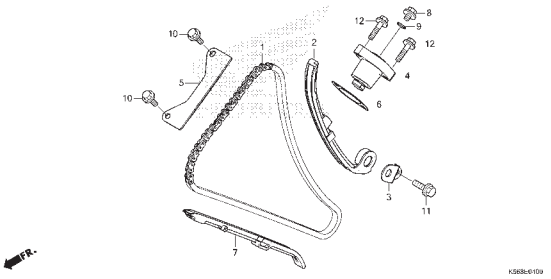

E-5 CYLINDER

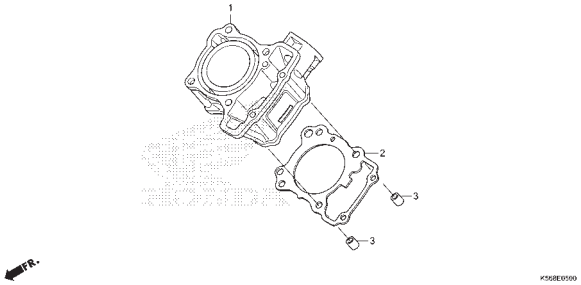

E-6 RIGHT CRANKCASE COVER

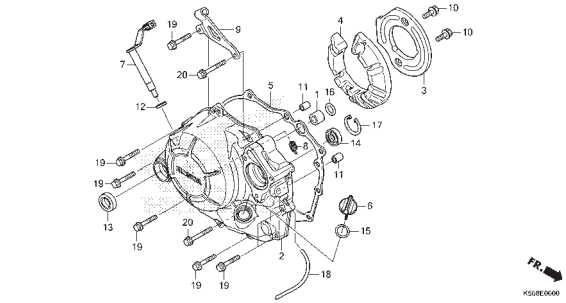

E-8 CLUTCH

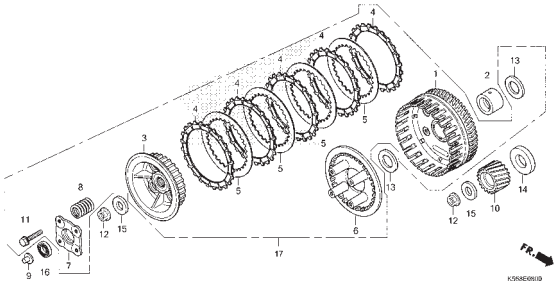

E-9 STARTING CLUTCH

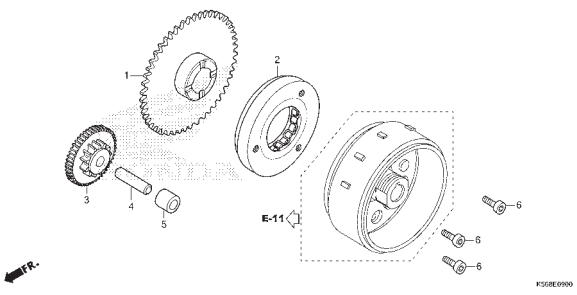

E-10 LEFT CRANKCASE COVER

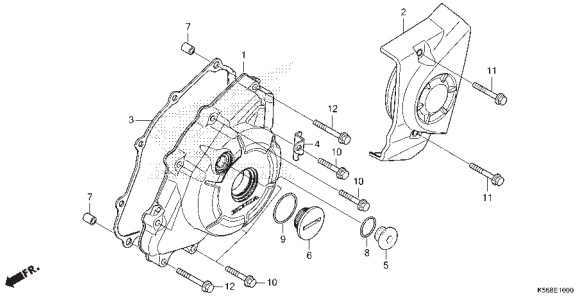

KELOMPOK MESIN

E-11 GENERATOR

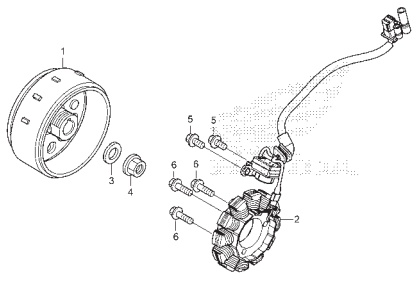

E-12 WATER PUMP

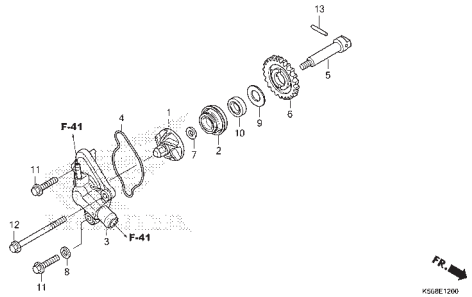

E-13 STARTER MOTOR

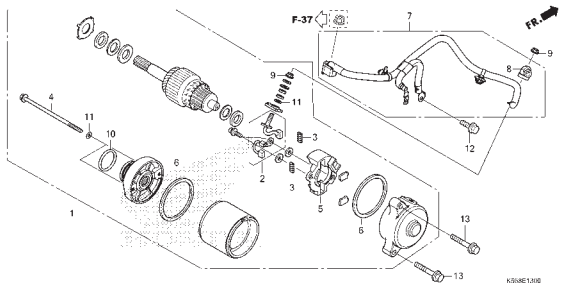

E-14 OIL PUMP

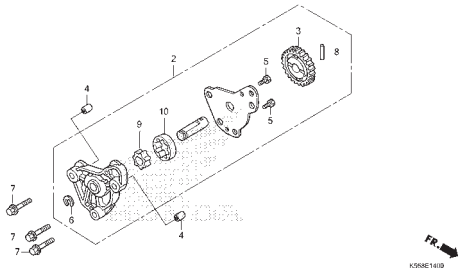

E-15 CRANKCASE

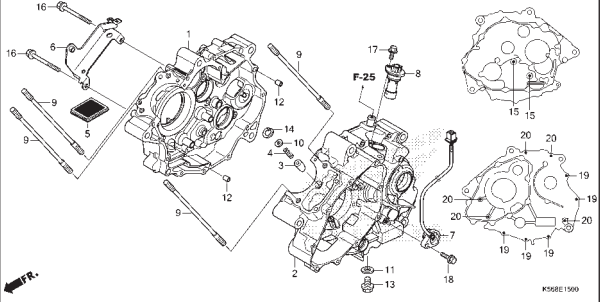

E-16 CRANKSHAFT/PISTON

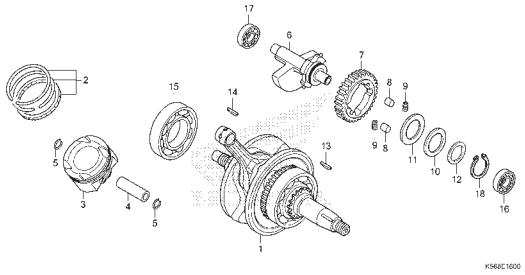

E-17 TRANSMISSION

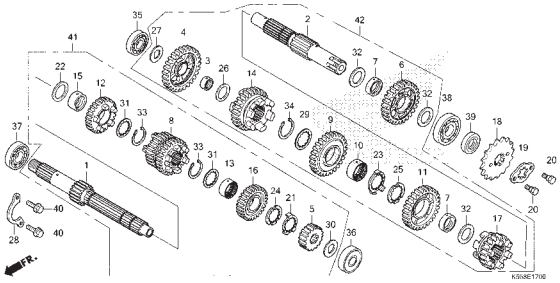

E-19 GEARSHIFT DRUM

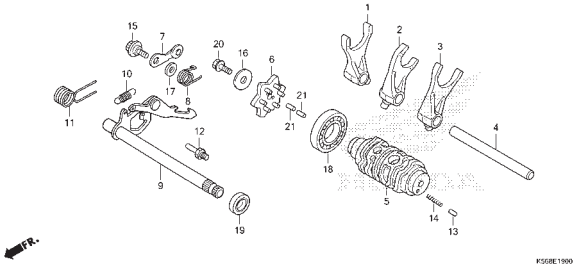

E-20 KICK STARTER SPINDLE

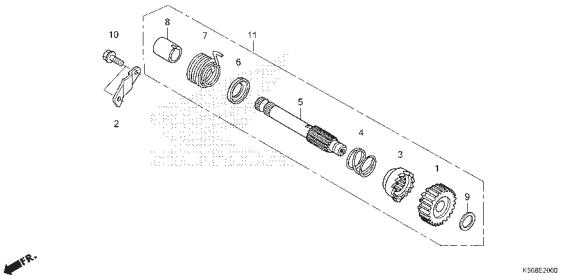

E-23 THROTTLE BODY

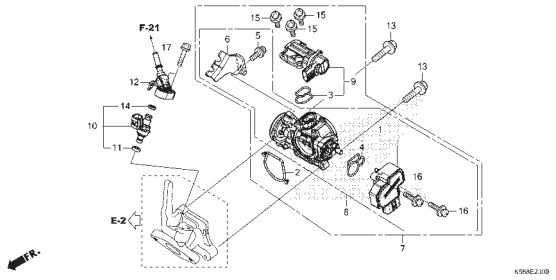

KELOMPOK RANGKA

F-1 HEADLIGHT

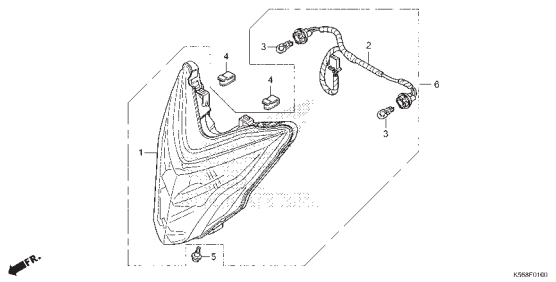

F-2 METER

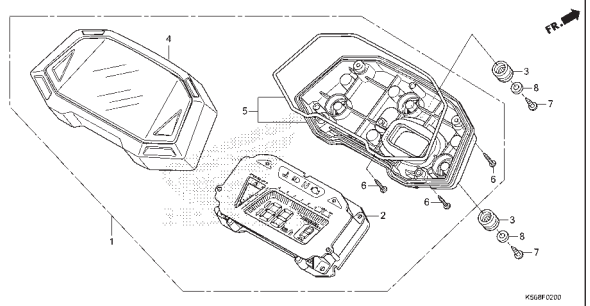

F-3 MIRROR

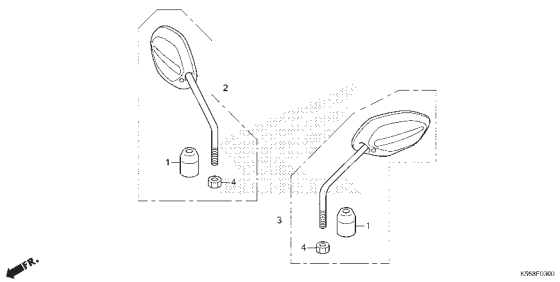

F-4 HANDLE LEVER/SWITCH/CABLE

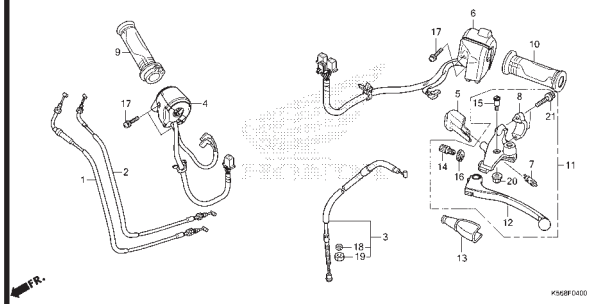

F-5 FRONT BRAKE MASTER CYLINDER

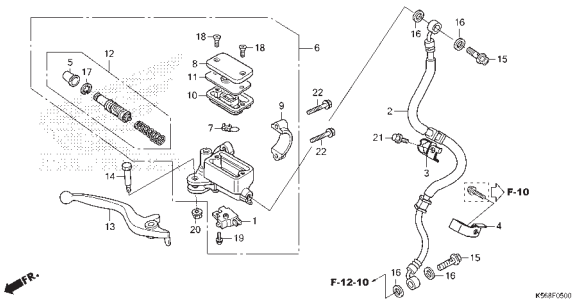

F-7 HANDLE PIPE/TOP BRIDGE

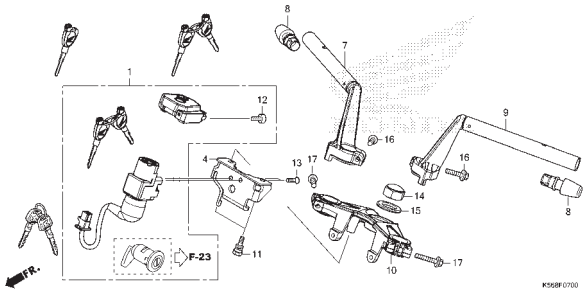

F-9 STEERING STEM

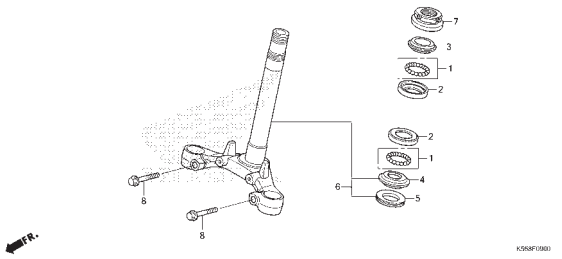

F-10 FRONT FENDER

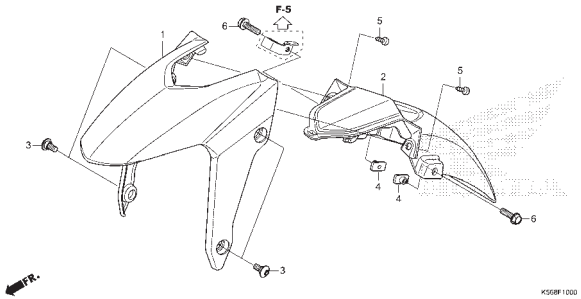

F-11 FRONT FORK

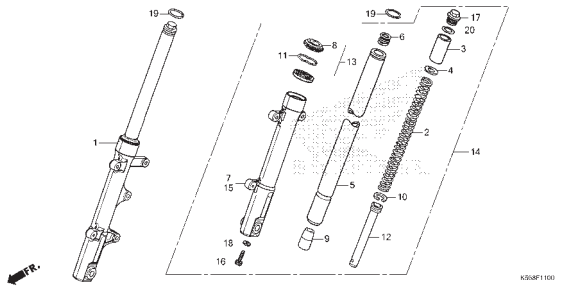

3

KELOMPOK RANGKA

F-12-10 FRONT BRAKE CALIPER

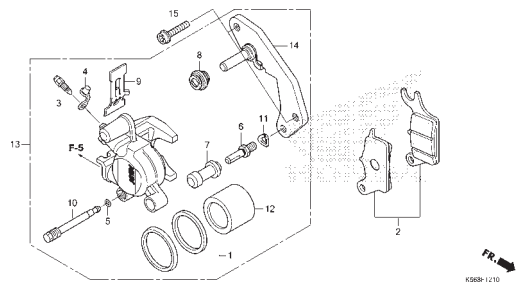

F-14-40 FRONT WHEEL

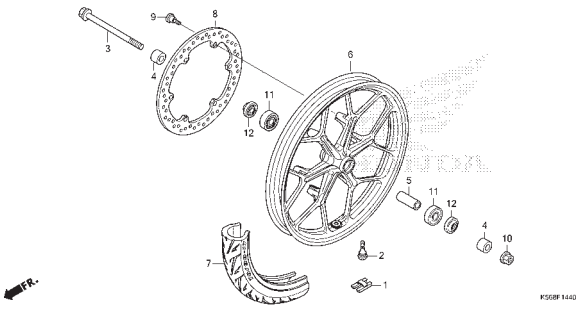

F-15 REAR BRAKE MASTER CYLINDER

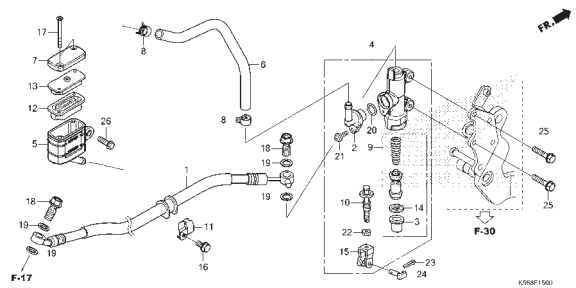

F-17 REAR BRAKE CALIPER

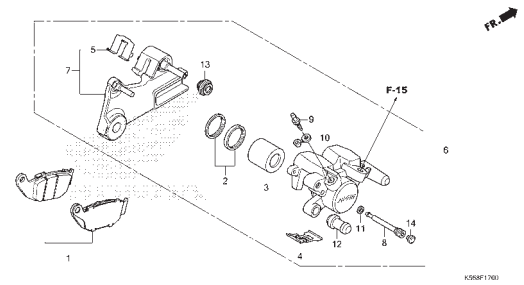

F-19-40 REAR WHEEL

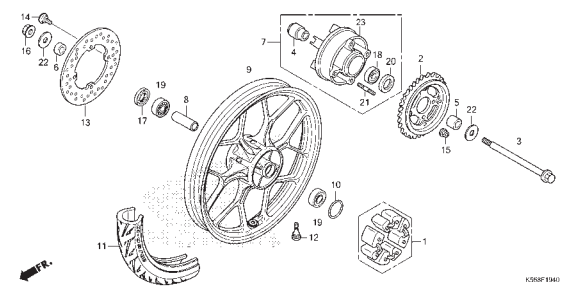

F-21 FUEL TANK

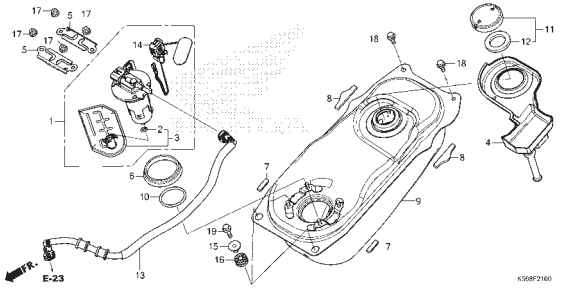

F-23 SEAT

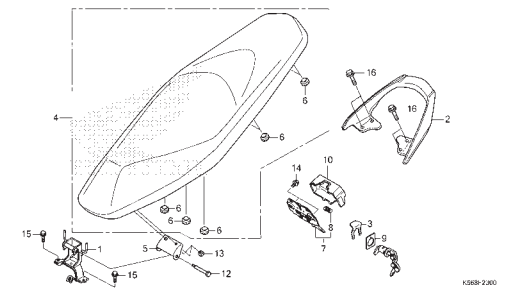

F-23-10 BODY COVER

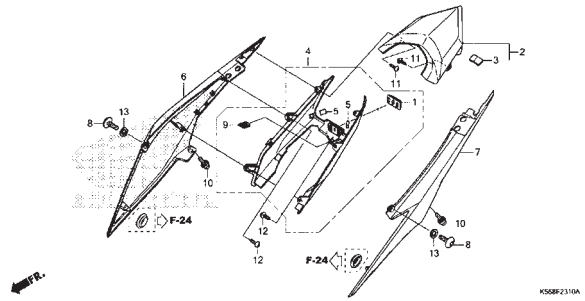

F-24 SIDE COVER

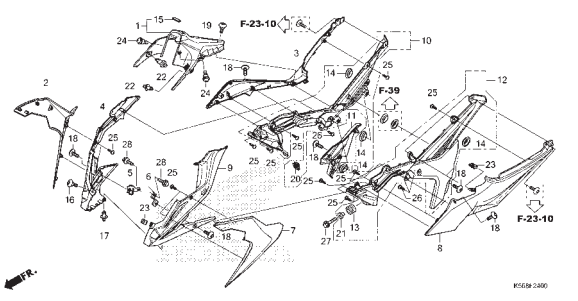

3

KELOMPOK RANGKA

F-25 AIR CLEANER

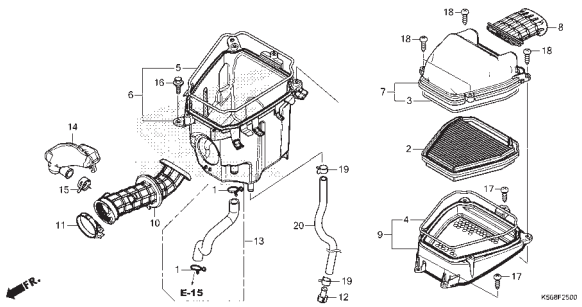

F-27 EXHAUST MUFFLER

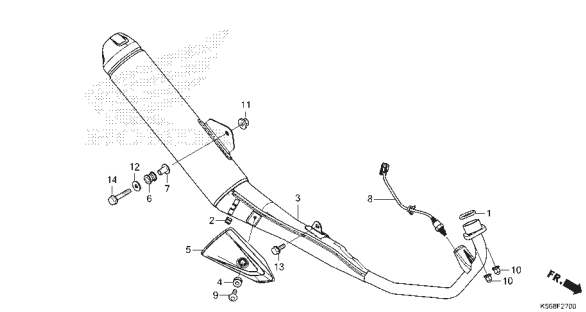

F-29 PEDAL

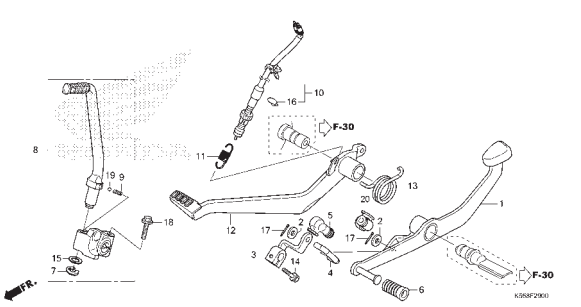

F-30 STEP

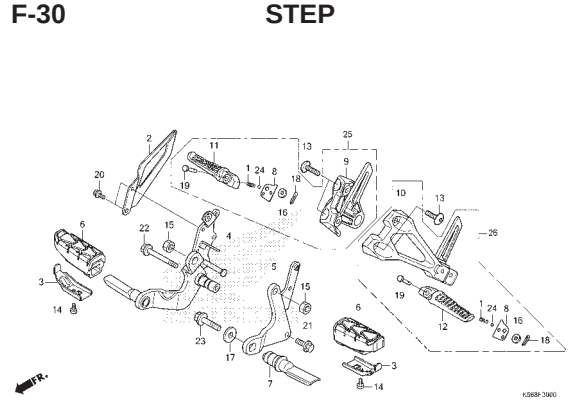

F-31 STAND

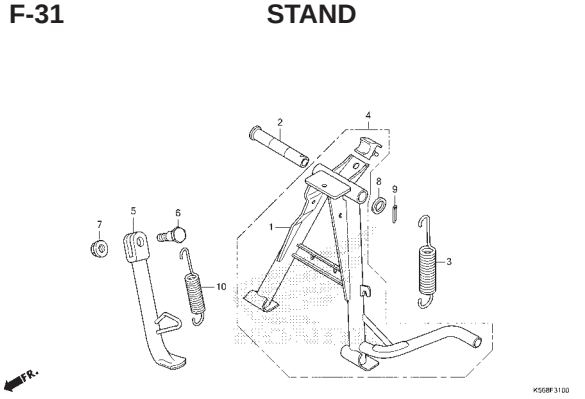

F-32 SWINGARM

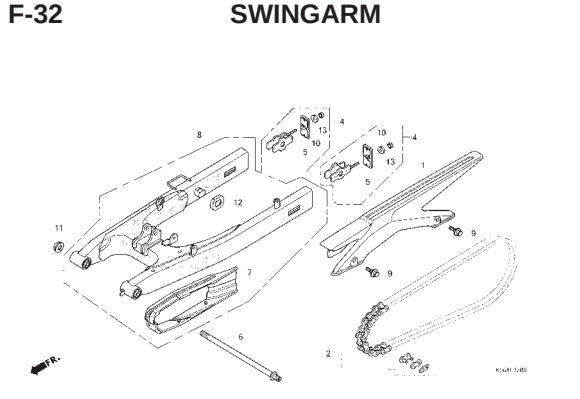

F-33 REAR CUSHION

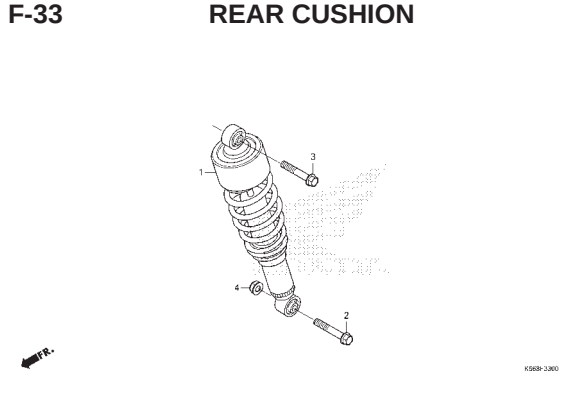

F-34 REAR FENDER

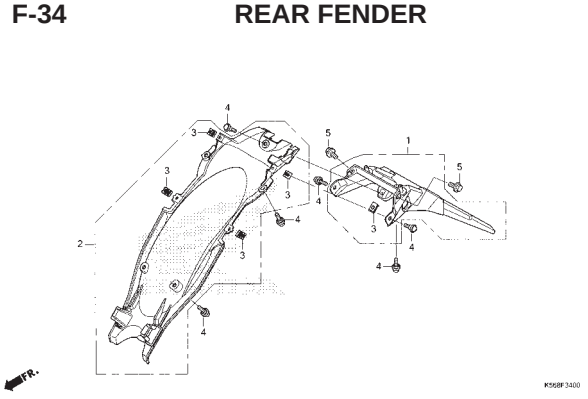

F-36-10 REAR COMBINATION LIGHT

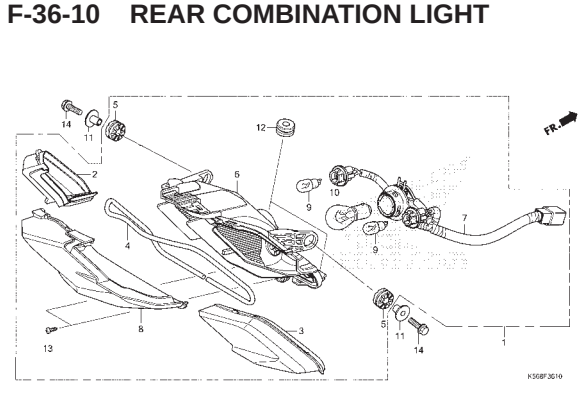

3

KELOMPOK RANGKA

F-37 BATTERY

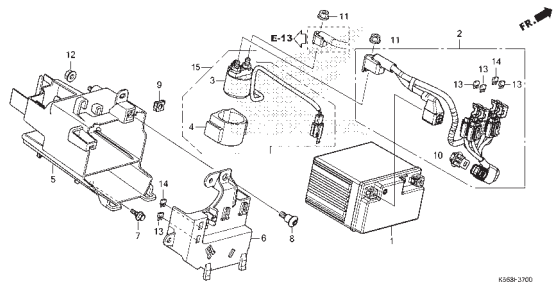

F-38 WIRE HARNESS

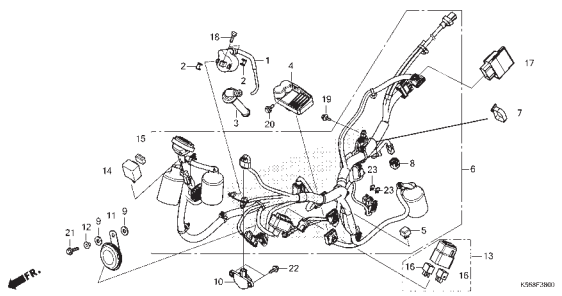

F-39 FRAME BODY

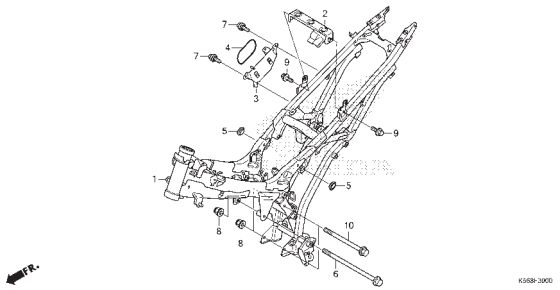

F-41 RADIATOR

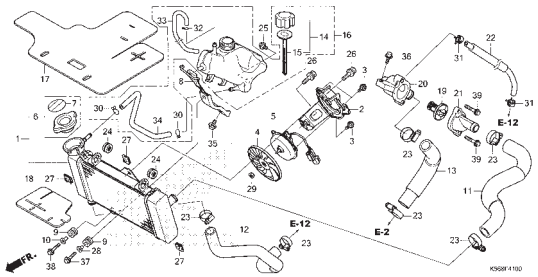

F-43 FRONT COWL

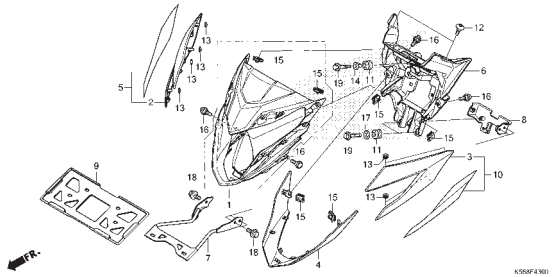

F-48 TOOLS

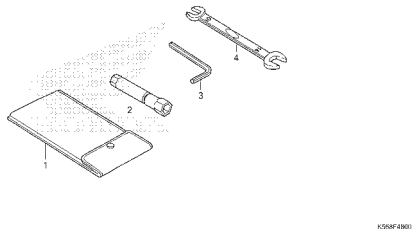

F-49 CAUTION LABEL

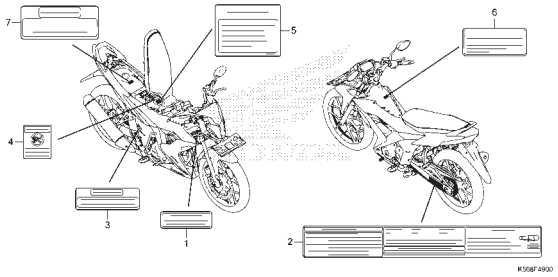

F-50 MARK/STRIPE(FS150R-STANDARD)

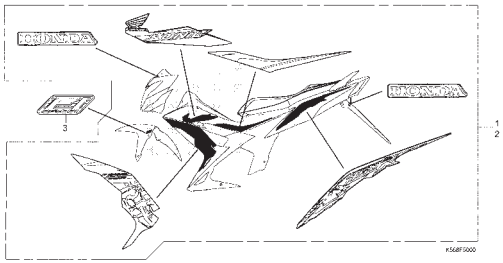

F-50-1 MARK/STRIPE(FS150R-REPSOL)

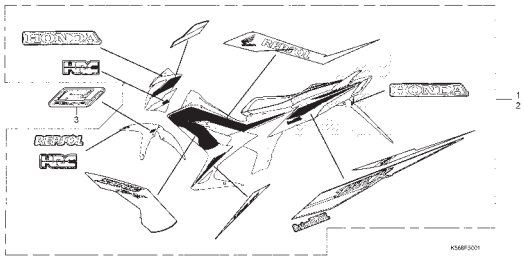

3

E-1 CYLINDER HEAD COVER

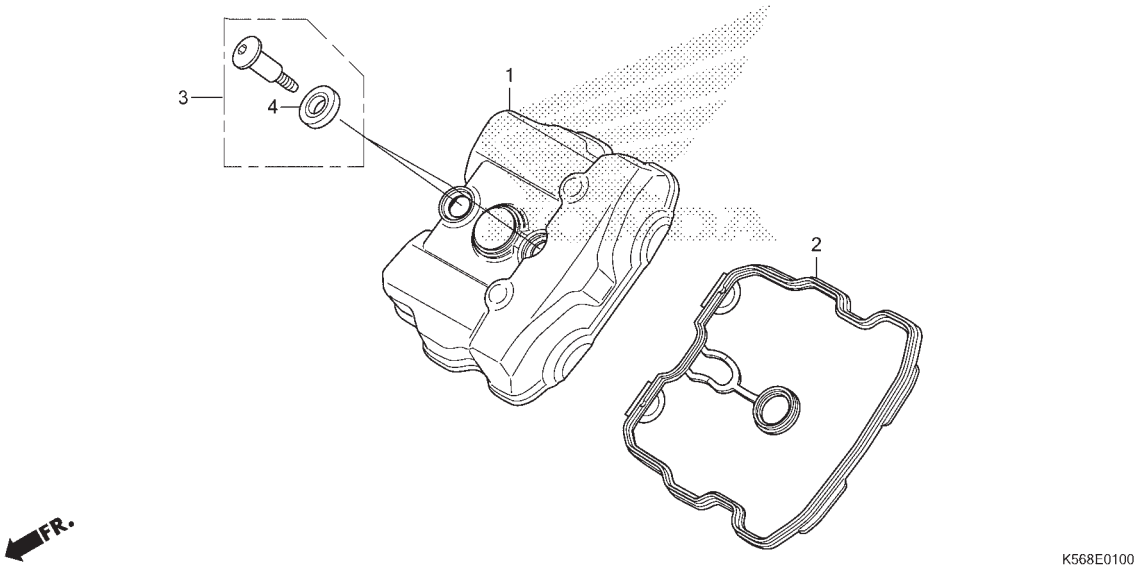

No. Ref.	L.O.N.	(Nomor ref. relatif) Deskripsi	F.R.T.
1	1111C4	COVER, CYLINDER HEAD.....	O,8
2	1111D2	GASKET, CYLINDER HEAD COVER....	O,8

No. Ref.	No. Part	Deskripsi	Jumlah SONIC 150R (FS150R) 2015(G)	No. Seri		Kode Parts Catalog
1	12311-K56-N20	COVER, CYLINDER HEAD	1	.....	.....	REPSOL
	12311-K56-N00	.....	1	.....	.....	STANDARD
2	12391-K56-N00	GASKET COMP., CYLINDER HEAD COVER	1			
3	9001A-KWC-900	BOLT, HEAD COVER	2			
4	90543-MV9-671	RUBBER, MOUNTING	2			

E-2 CYLINDER HEAD

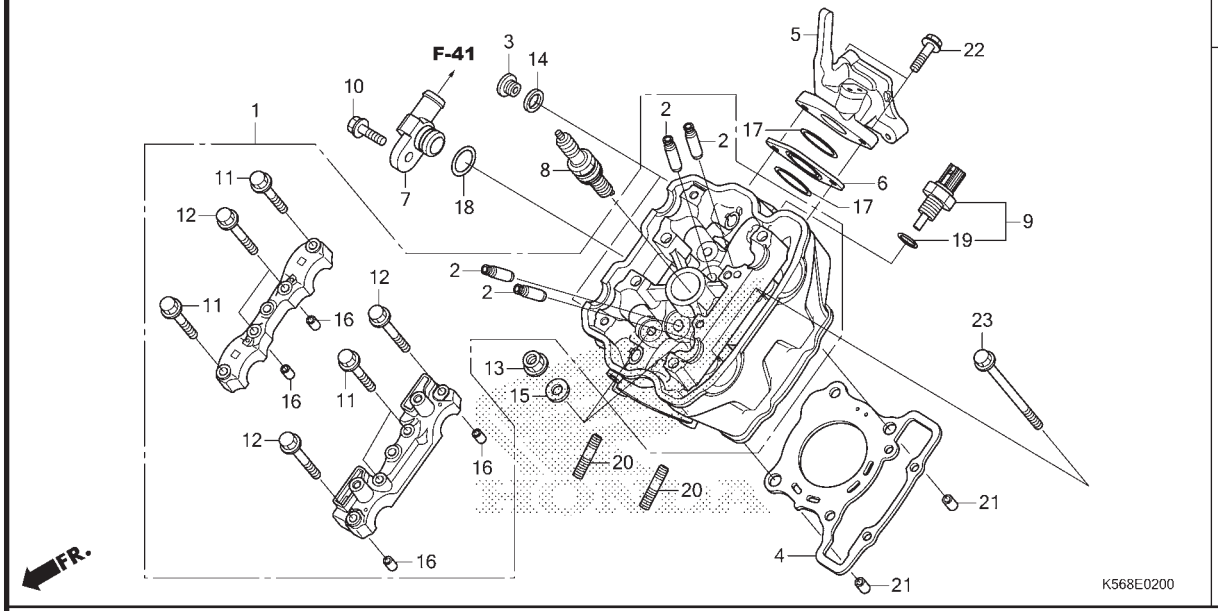

No. Ref.	L.O.N.	(Nomor ref. relatif) Deskripsi	F.R.T.
1	111106	HEAD, CYLINDER.....	3,4
		.TERMASUK: Penyetelan dan skir klep	
2	1111L9	GUIDE, INTAKE VALVE(SATU).....	3,0
		.TERMASUK: Reaming	
		.TERMASUK: Penyetelan dan skir klep	
	1111L9A	.Ganti semua intake valve guide tambahkan.....	0,3
	1111M0	GUIDE, EXHAUST VALVE(SATU).....	3,0
		.TERMASUK: Reaming	
		.TERMASUK: Penyetelan dan skir klep	
	1111M0A	.Ganti semua intake valve guide tambahkan.....	0,3
	1111M9	GUIDE, VALVE :UNTUK 1 KENDARAAN	3,9
		.TERMASUK: Reaming	
		.TERMASUK: Penyetelan dan skir klep	
4	111115	GASKET, CYLINDER HEAD.....	2,1
5		(6,17)	
	111107	MANIFOLD, INTAKE.....	0,8

No. Ref.	No. Part	Deskripsi	Jumlah SONIC 150R (FS150R) 2015(G)	No. Seri	Kode Parts Catalog
1	12010-K56-N00	HEAD ASSY., CYLINDER	1		
2	12205-KYJ-305	GUIDE, EX. VALVE(O.S.)	4		
3	12207-KYJ-900	BOLT, SEALING, 12MM	2		
4	12251-K56-N01	GASKET, CYLINDER HEAD (STD./0.25/0.50)	1		
	12251-K56-N02	GASKET, CYLINDER HEAD(NLK) (STD./0.25/0.50)	1		
5	17111-K56-N00	PIPE, IN.	1		
6	17119-K56-N00	INSULATOR, IN. PIPE	1		
7	19064-KPP-900	JOINT, WATER	1		
8	31919-K25-601	PLUG, SPARK(MR9C-9N)(NG)	1		
	31919-K25-602	PLUG, SPARK(U27EPR-N9)(DS)	1		
9	37870-KZR-601	SENSOR ASSY., WATER TEMP	1		
10	90004-GHB-661	BOLT, FLANGE, 6X22	1		
11	90017-K56-N00	BOLT, FLANGE, 6X32	4		
12	90019-K56-N00	BOLT, FLANGE, 6X40	4		
13	90202-KGB-611	NUT, FLANGE, 8MM	4		
14	90418-KYJ-900	WASHER, 12.2X17X1.5	2		
15	90483-K15-900	WASHER, 8MM	4		
16	90702-KRM-840	DOWEL PIN, 8X14	4		
	94301-08141	.....	4		
17	91301-K56-N00	O-RING, IN. PIPE	2		
18	91301-KV7-671	O-RING, 14.8X1.9	1		
19	91307-PLC-004	O-RING, 9.5X1.9	1		
20	92900-08025-0E	BOLT, STUD, 8X25	2		

E-2 CYLINDER HEAD

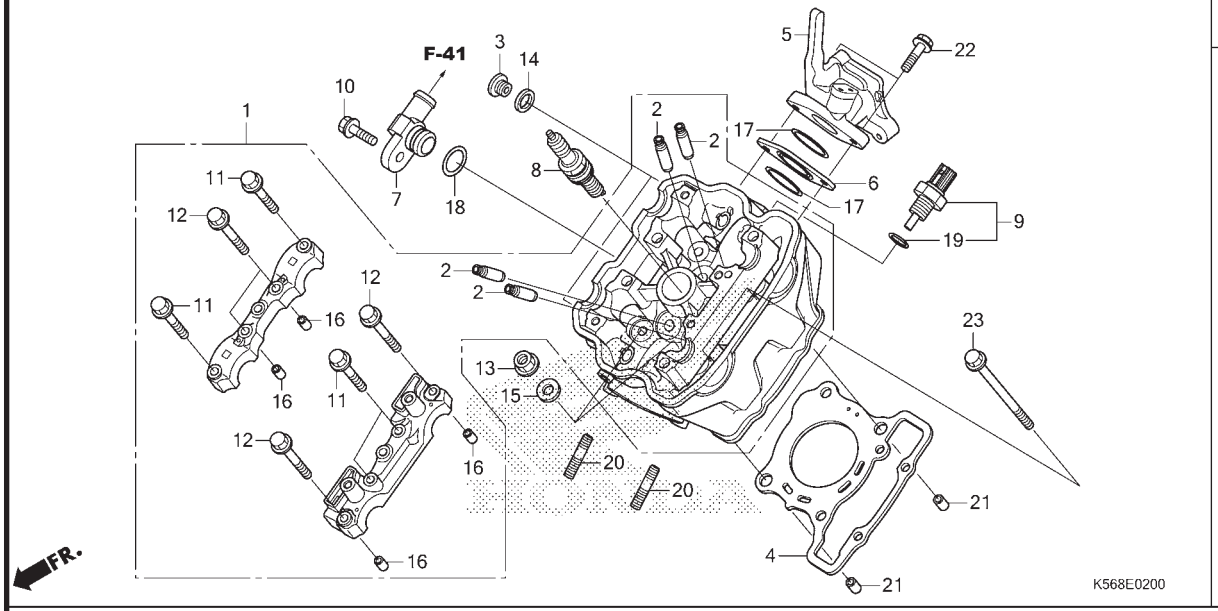

No. Ref.	L.O.N.	(Nomor ref. relatif) Deskripsi	F.R.T.
7		(18)	
	114150	JOINT, WATER.....	0,7
8	614130	PLUG, SPARK.....	0,6
9		(19)	
	6171A9	SENSOR, WATER TEMP.....	0,8

No. Ref.	No. Part	Deskripsi	Jumlah SONIC 150R (FS150R) 2015(G)	No. Seri	Kode Parts Catalog
21	94301-10120	DOWEL PIN, 10X12	2		
22	95701-06025-00	BOLT, FLANGE, 6X25	2		
23	95701-06115-00	BOLT, FLANGE, 6X115	2		

E-3 CAMSHAFT/VALVE

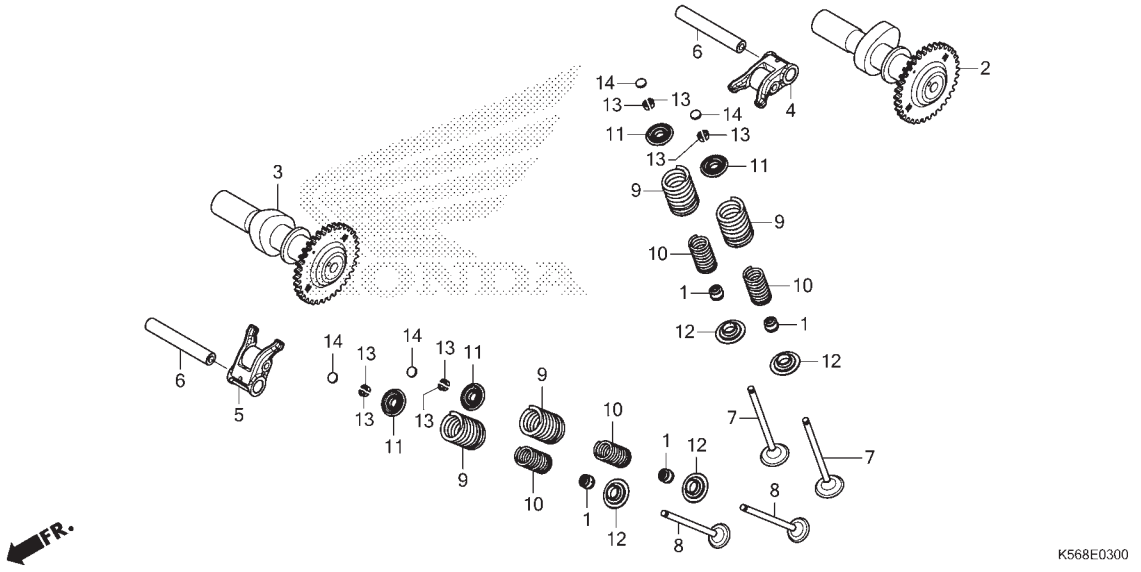

No. Ref.	L.O.N.	(Nomor ref. relatif) Deskripsi	F.R.T.
2	1111E5	CAMSHAFT :INTAKE.....	1,6
		.TERMASUK: Penyetelan jarak renggang klep	
3	1111E6	CAMSHAFT :EXHAUST.....	1,6
		.TERMASUK: Penyetelan jarak renggang klep	
	1111T4	CAMSHAFT :UNTUK 1 KENDARAAN....	1,7
		.TERMASUK: Penyetelan jarak renggang klep	
4	1111K8	ARM, INTAKE VALVE ROCKER(SATU)	1,5
		.TERMASUK: Penyetelan klep	
5	1111K9	ARM, EXHAUST VALVE ROCKER(SATU)	1,5
		.TERMASUK: Penyetelan klep	
	1111L8	ARM, VALVE ROCKER :UNTUK 1 KENDARAAN.....	1,5
		.TERMASUK: Penyetelan klep	
7	1111N0	VALVE, INTAKE(SATU).....	2,5
		.TERMASUK: Refacing	
	1111N0A	.Ganti semua intake valve tambahkan	0,2
8	1111N1	VALVE, EXHAUST(SATU).....	2,5
		.TERMASUK: Refacing	
	1111N1A	.Ganti semua intake valve tambahkan	0,2

No. Ref.	No. Part	Deskripsi	Jumlah SONIC 150R (FS150R) 2015(G)	No. Seri	Kode Parts Catalog
1	12209-K56-N01	SEAL, VALVE STEM(NO)	4		
	12209-ML0-722	SEAL, VALVE STEM(AR)	4		
2	14110-K56-N00	CAMSHAFT COMP., IN.	1		
3	14210-K56-N00	CAMSHAFT COMP., EX.	1		
4	14430-K56-N00	ARM COMP., IN. VALVE ROCKER ...	1		
5	14440-K56-N00	ARM COMP., EX. VALVE ROCKER ...	1		
6	14451-K56-N00	SHAFT, ROCKER ARM	2		
7	14711-K56-N00	VALVE, IN.	2		
8	14721-K56-N00	VALVE, EX.	2		
9	14751-K56-N01	SPRING, VALVE OUTER	4		
10	14761-K56-N01	SPRING, VALVE INNER	4		
11	14771-MFL-000	RETAINER, VALVE SPRING	4		
12	14775-K56-N00	SEAT, VALVE SPRING	4		
13	14781-ML0-720	COTTER, VALVE	8		
14	14913-KT7-013	SHIM, TAPPET(1.500)	4		
	14914-KT7-013	SHIM, TAPPET(1.525)	4		
	14915-KT7-013	SHIM, TAPPET(1.550)	4		
	14916-KT7-013	SHIM, TAPPET(1.575)	4		
	14917-KT7-013	SHIM, TAPPET(1.600)	4		
	14918-KT7-013	SHIM, TAPPET(1.625)	4		
	14919-KT7-013	SHIM, TAPPET(1.650)	4		
	14920-KT7-013	SHIM, TAPPET(1.675)	4		
	14921-KT7-013	SHIM, TAPPET(1.700)	4		
	14922-KT7-013	SHIM, TAPPET(1.725)	4		
	14923-KT7-013	SHIM, TAPPET(1.750)	4		
	14924-KT7-013	SHIM, TAPPET(1.775)	4		

CAMSHAFT/VALVE

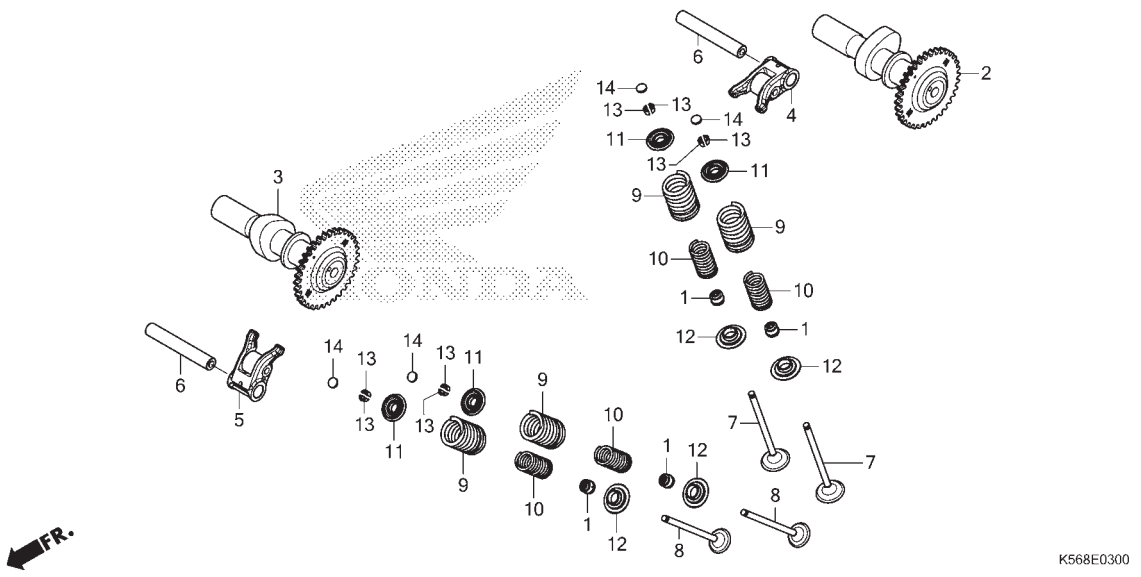

No. Ref.	L.O.N.	(Nomor ref. relatif) Deskripsi	F.R.T.
(8)	1111P0	VALVE :UNTUK 1 KENDARAAN.....	3,1
		TERMASUK: Refacing	
9		(1,10,11,12,13)	
	1111P2	INTAKE VALVE SPRING DAN/ATAU STEM SEAL(SATU).....	2,3
	1111P2A	.Ganti semua intake valve tambahkan	0,1
	1111P3	EXHAUST VALVE SPRING DAN/ATAU STEM SEAL(SATU).....	2,3
	1111P3A	.Ganti semua intake valve tambahkan	0,1
	1111Q2	VALVE SPRING DAN/ATAU STEM SEAL :UNTUK 1 KENDARAAN.....	2,6

No. Ref.	No. Part	Deskripsi	Jumlah SONIC 150R (FS150R) 2015(G)	No. Seri	Kode Parts Catalog
(14)	14925-KT7-013	SHIM, TAPPET(1.800)	4		
	14926-KT7-013	SHIM, TAPPET(1.825)	4		
	14927-KT7-013	SHIM, TAPPET(1.850)	4		
	14928-KT7-013	SHIM, TAPPET(1.875)	4		
	14929-KT7-013	SHIM, TAPPET(1.900)	4		
	14930-KT7-013	SHIM, TAPPET(1.925)	4		
	14931-KT7-013	SHIM, TAPPET(1.950)	4		
	14932-KT7-013	SHIM, TAPPET(1.975)	4		
	14933-KT7-013	SHIM, TAPPET(2.000)	4		
	14934-KT7-013	SHIM, TAPPET(2.025)	4		
	14935-KT7-013	SHIM, TAPPET(2.050)	4		
	14936-KT7-013	SHIM, TAPPET(2.075)	4		
	14937-KT7-013	SHIM, TAPPET(2.100)	4		
	14938-KT7-013	SHIM, TAPPET(2.125)	4		
	14939-KT7-013	SHIM, TAPPET(2.150)	4		
	14940-KT7-013	SHIM, TAPPET(2.175)	4		
	14941-KT7-013	SHIM, TAPPET(2.200)	4		
	14942-KT7-013	SHIM, TAPPET(2.225)	4		
	14943-KT7-013	SHIM, TAPPET(2.250)	4		
	14944-KT7-013	SHIM, TAPPET(2.275)	4		
	14945-KT7-013	SHIM, TAPPET(2.300)	4		
	14946-KT7-013	SHIM, TAPPET(2.325)	4		
	14947-KT7-013	SHIM, TAPPET(2.350)	4		
	14948-KT7-013	SHIM, TAPPET(2.375)	4		
	14949-KT7-013	SHIM, TAPPET(2.400)	4		
	14950-KT7-013	SHIM, TAPPET(2.425)	4		
	14951-KT7-013	SHIM, TAPPET(2.450)	4		
	14952-KT7-013	SHIM, TAPPET(2.475)	4		

E-3 CAMSHAFT/VALVE

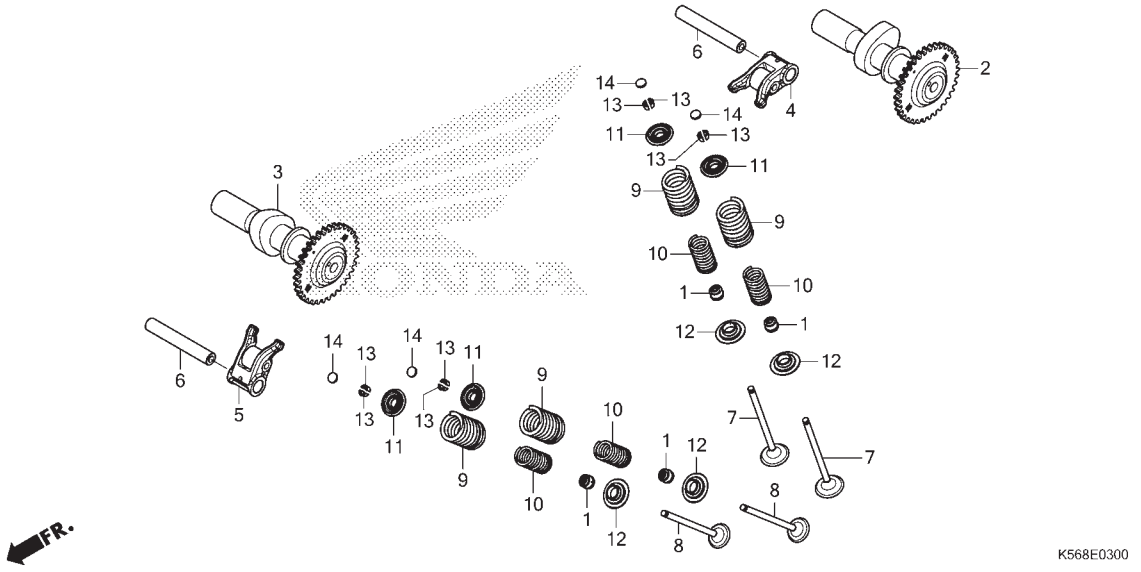

No. Ref.	No. Part	Deskripsi	Jumlah SONIC 150R (FS150R) 2015(G)	No. Seri	Kode Parts Catalog
(14)	14953-KT7-013	SHIM, TAPPET(2.500)	4		
	14954-KT7-013	SHIM, TAPPET(2.525)	4		
	14955-KT7-013	SHIM, TAPPET(2.550)	4		
	14956-KT7-013	SHIM, TAPPET(2.575)	4		
	14957-KT7-013	SHIM, TAPPET(2.600)	4		
	14958-KT7-013	SHIM, TAPPET(2.625)	4		
	14959-KT7-013	SHIM, TAPPET(2.650)	4		
	14960-KT7-013	SHIM, TAPPET(2.675)	4		
	14961-KT7-013	SHIM, TAPPET(2.700)	4		
	14962-KT7-013	SHIM, TAPPET(2.725)	4		
	14963-KT7-013	SHIM, TAPPET(2.750)	4		
	14964-KT7-013	SHIM, TAPPET(2.775)	4		
	14965-KT7-013	SHIM, TAPPET(2.800)	4		
	14966-KT7-013	SHIM, TAPPET(2.825)	4		
	14967-KT7-013	SHIM, TAPPET(2.850)	4		
	14968-KT7-013	SHIM, TAPPET(2.875)	4		
	14969-KT7-013	SHIM, TAPPET(2.900)	4		

E-4 CAM CHAIN/TENSIONER

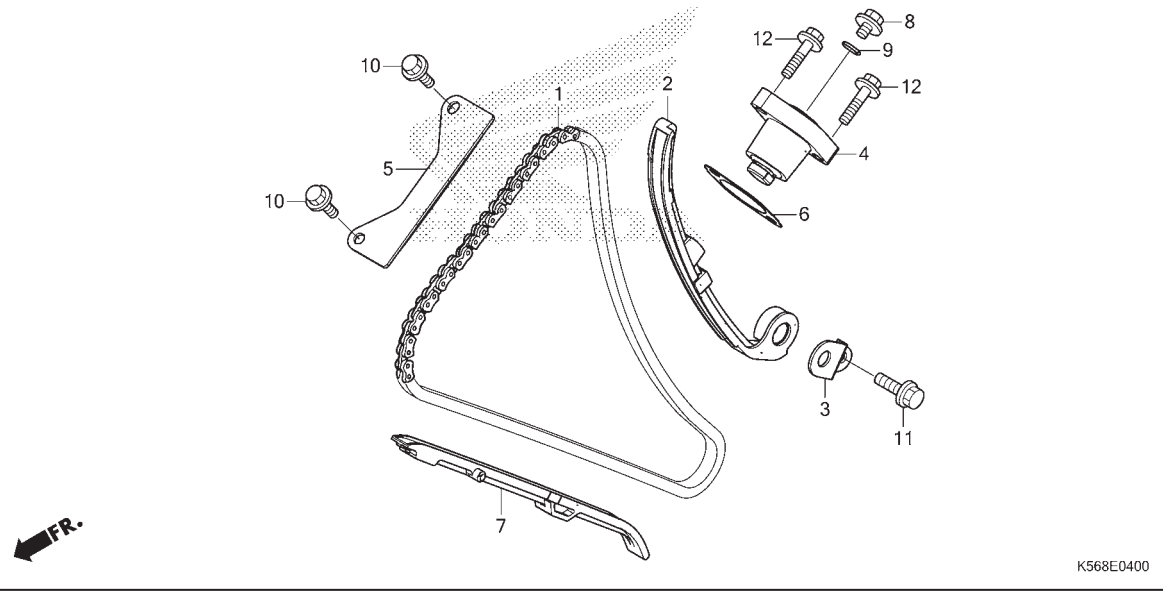

No. Ref.	L.O.N.	(Nomor ref. relatif) Deskripsi	F.R.T.
1	110140	CHAIN, CAM.....	1,9
2	111130	TENSIONER, CAM CHAIN.....	1,9
4		(6)	
	111133	LIFTER, TENSIONER.....	0,6
5	1111G9	GUIDE B, CAM CHAIN.....	0,8
7	111139	GUIDE, CAM CHAIN.....	2,1

No. Ref.	No. Part	Deskripsi	Jumlah SONIC 150R (FS150R) 2015(G)	No. Seri	Kode Parts Catalog
1	14401-K56-N01	CHAIN, CAM(120L)	1		
2	14510-K56-N00	TENSIONER COMP., CAM CHAIN	1		
3	14515-K56-N00	PLATE, TENSIONER SETTING	1		
4	14520-KPP-T01	LIFTER ASSY., TENSIONER	1		
5	14546-K56-N00	GUIDE B, CAM CHAIN	1		
6	14560-KSP-910	GASKET, TENSIONER LIFTER	1		
7	14611-K56-N00	GUIDE A, CAM CHAIN	1		
8	90005-K56-N00	BOLT, FLANGE, 6X6	1		
9	91306-MG3-001	O-RING, 1.5X9.5	1		
10	95701-06014-0	BOLT, FLANGE, 6X14	2		
11	96001-06014-00	BOLT, FLANGE, 6X14	1		
12	96001-06022-00	BOLT, FLANGE, 6X22	2		

E-5 CYLINDER

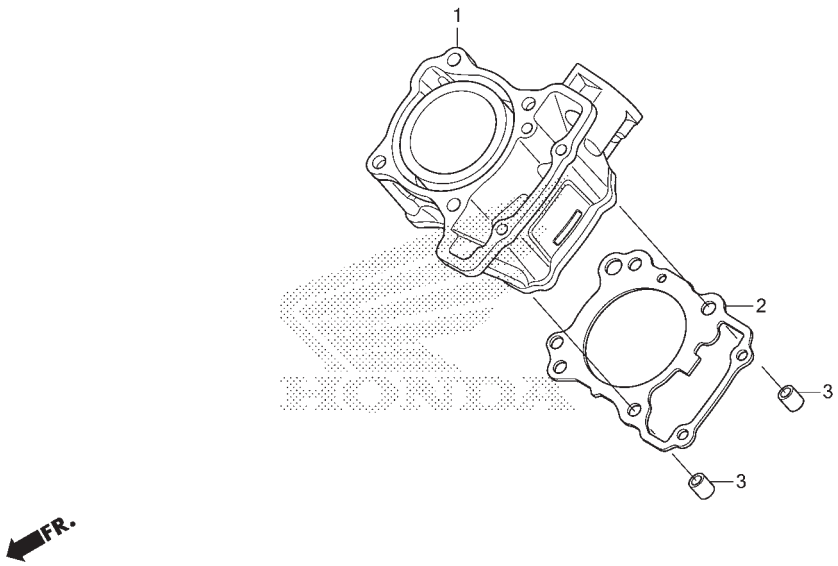

No. Ref.	L.O.N.	(Nomor ref. relatif) Deskripsi	F.R.T.
1	1111A5	CYLINDER.....	2,3
2	111102	GASKET, CYLINDER.....	2,2

No. Ref.	No. Part	Deskripsi	Jumlah SONIC 150R (FS150R) 2015(G)	No. Seri	Kode Parts Catalog
1	12100-K56-N00	CYLINDER COMP.....	1		
2	12191-K56-N01	GASKET, CYLINDER.....	1		
3	94301-10120	DOWEL PIN, 10X12.....	2		

2

E-6 RIGHT CRANKCASE COVER

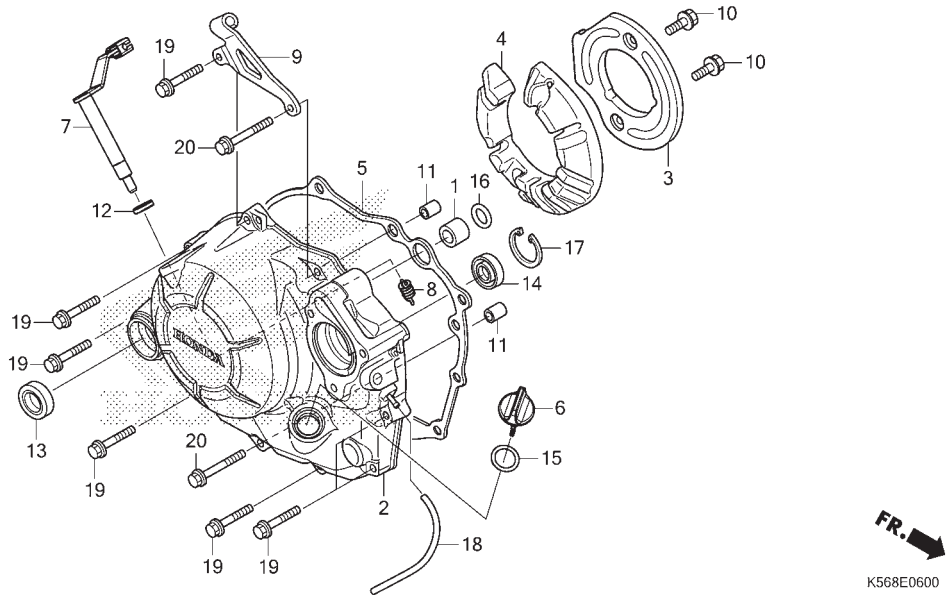

No. Ref.	L.O.N.	(Nomor ref. relatif) Deskripsi	F.R.T.
2	110159	COVER, CRANKCASE :RIGHT.....	1,7
5		(16)	
	110158	GASKET, CRANKCASE COVER :RIGHT	1,1
7		(12)	
	2121A7	LEVER, CLUTCH.....	1,1
13	112105	OIL SEAL, KICK STARTER SPINDLE	1,2
14	1101K3	OIL SEAL, CRANKCASE COVER :RIGHT.....	1,2

No. Ref.	No. Part	Deskripsi	Jumlah SONIC 150R (FS150R) 2015(G)	No. Seri		Kode Parts Catalog
1	11102-K56-N00	COLLAR, WATER PASS, 13X8	1			
2	11330-K56-N20	COVER COMP., R. CRANKCASE	1	.....	.....	REPSOL
	11330-K56-N00	.....	1	.....	.....	STANDARD
3	11333-KGH-901	PLATE, R. COVER	1			
4	11334-K56-N00	RUBBER, R. COVER	1			
5	11394-K56-N00	GASKET, R. CRANKCASE COVER	1			
6	15651-KGH-900	GAUGE, OIL LEVEL	1			
7	22810-K56-N00	LEVER COMP., CLUTCH	1			
8	22815-KM7-700	SPRING, CLUTCH LEVER	1			
9	22821-K56-N00	RECEIVER, CLUTCH CABLE	1			
10	90001-K56-N00	BOLT, FLANGE, 6X14	2			
11	90702-HC4-001	DOWEL PIN, 8X16	2			
12	91202-KSP-911	OIL SEAL, 12X18X4	1			
13	91204-MC7-003	OIL SEAL, 16X28X7	1			
14	91205-KF0-003	OIL SEAL, 12X20X5	1			
15	91307-035-005	O-RING, 18X3	1			
16	91322-K56-N01	O-RING, 12.8X1.8	1			
17	94520-22000	CIRCLIP, INTERNAL, 22MM	1			
18	95005-50180-30	TUBE, 5X180(95005-50001-30M) ..	1			
19	96001-06030-00	BOLT, FLANGE, 6X30	7			
20	96001-06040-00	BOLT, FLANGE, 6X40	2			

E-8 CLUTCH

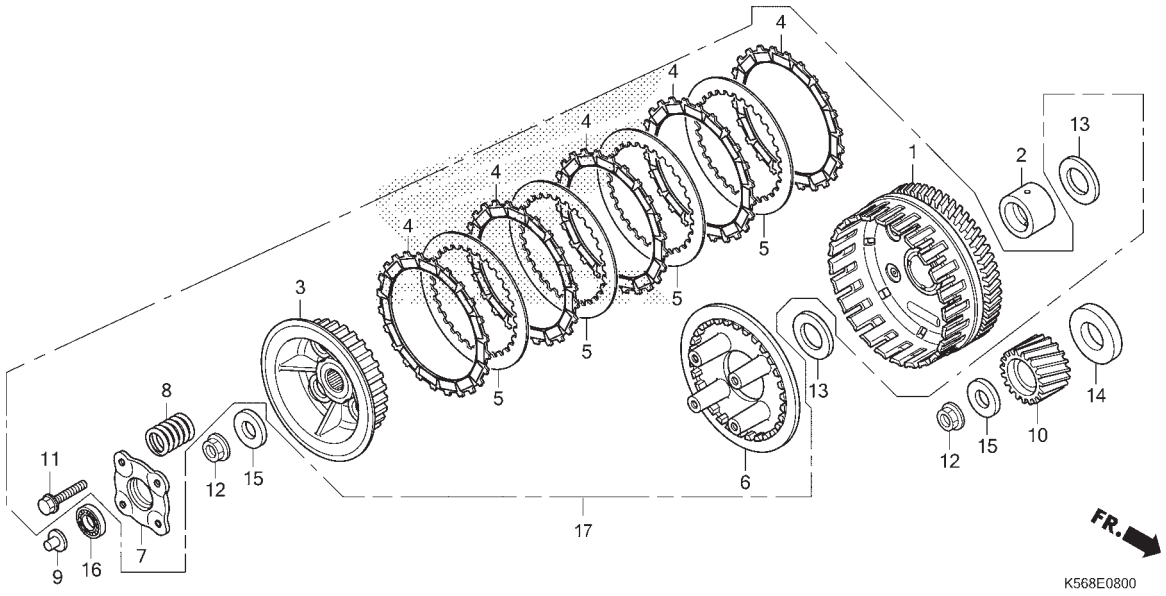

No. Ref.	L.O.N.	(Nomor ref. relatif) Deskripsi	F.R.T.
1	2121A0	OUTER, CLUTCH.....	1,4
3	212112	CENTER, CLUTCH.....	1,3
4		(5)	
	2121A1	DISC, CLUTCH FRICTION.....	1,4
		.CATATAN: Waktu sama untuk dua unit atau lebih	
6	2121A3	PLATE, CLUTCH PRESSURE.....	1,4
7	2121A4	PLATE, CLUTCH LIFTER.....	1,2
8	212107	SPRING, CLUTCH.....	1,2
		.CATATAN: Waktu sama untuk dua unit atau lebih	
9	2121B6	ROD, CLUTCH LIFTER.....	1,1
10	211105	GEAR, PRIMARY DRIVE.....	1,6
16	2121B4	BEARING, CLUTCH LIFTER.....	1,1

No. Ref.	No. Part	Deskripsi	Jumlah SONIC 150R (FS150R) 2015(G)	No. Seri	Kode Parts Catalog
1	22100-K56-N01	OUTER COMP., CLUTCH(75T)	1		
2	22105-K56-N00	GUIDE, CLUTCH OUTER	1		
3	22121-K56-N01	CENTER, CLUTCH	1		
4	22201-K56-N01	DISK, CLUTCH FRICTION	5		
5	22321-KWW-742	PLATE, CLUTCH	4		
6	22350-K56-N01	PLATE, CLUTCH PRESSURE	1		
7	22361-K56-N01	PLATE, CLUTCH LIFTER	1		
8	22401-K56-N01	SPRING, CLUTCH	4		
9	22849-K15-900	ROD, CLUTCH LIFTER	1		
10	23121-K56-N00	GEAR A, PRIMARY DRIVE(23T) (WHITE)	1		
	23122-K56-N00	GEAR B, PRIMARY DRIVE(23T) (BLUE)	1		
	23123-K56-N00	GEAR C, PRIMARY DRIVE(23T) (YELLOW)	1		
11	90008-KT7-001	BOLT, FLANGE, 6X25	4		
12	90202-KRM-840	NUT, SPECIAL FLANGE, 14MM	2		
13	90401-KY4-902	WASHER, PLAIN, 17MM	2		
14	90434-K56-N00	WASHER, 20MM	1		
15	90462-KWW-740	WASHER, 14.1MM	2		
16	91007-KE1-003	BEARING, RADIAL BALL, 6903	1		
17	22000-K56-N01	CLUCTH ASSY.	1		

E-9 STARTING CLUTCH

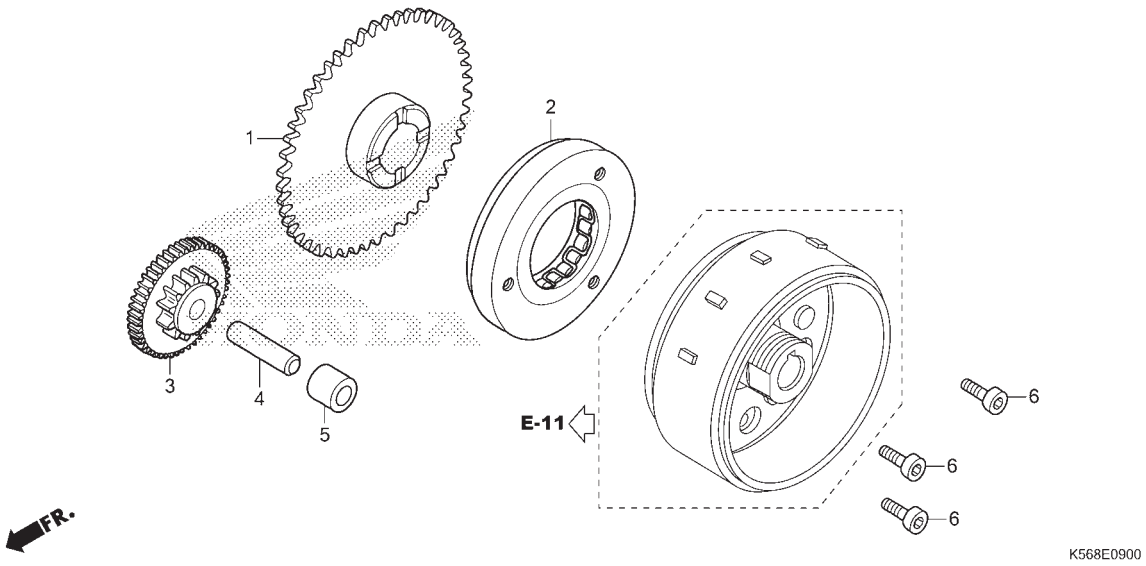

No. Ref.	L.O.N.	(Nomor ref. relatif) Deskripsi	F.R.T.
1	612120	GEAR, STARTER DRIVEN.....	0,8
2	612131	OUTER, STARTING CLUTCH.....	0,9
3	612125	GEAR, STARTER REDUCTION.....	0,8

No. Ref.	No. Part	Deskripsi	Jumlah SONIC 150R (FS150R) 2015(G)	No. Seri	Kode Parts Catalog
1	28110-KGH-911	GEAR COMP., STARTER DRIVEN	1		
2	28125-HC3-017	OUTER COMP., STARTING CLUTCH ..	1		
3	28131-K15-901	GEAR, STARTER REDUCTION	1		
4	28132-KGH-911	SHAFT, REDUCTION GEAR	1		
5	28133-KPP-901	COLLAR, STARTER REDUCTION	1		
6	90010-KM1-001	BOLT, SOCKET, 8X18	3		

E-10 LEFT CRANKCASE COVER

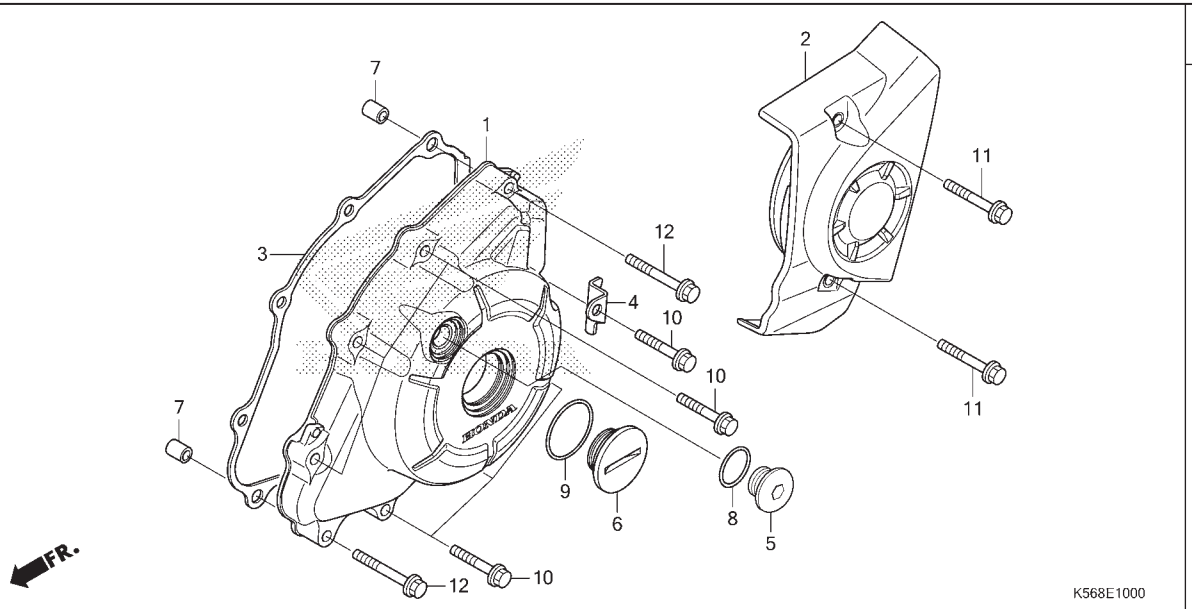

No. Ref.	L.O.N.	(Nomor ref. relatif) Deskripsi	F.R.T.
1	1101A6	COVER, CRANKCASE :LEFT.....	0,8
2	1101B0	COVER, CRANKCASE :LEFT REAR....	0,1
3	1101A3	GASKET, CRANKCASE COVER :LEFT..	0,7

No. Ref.	No. Part	Deskripsi	Jumlah SONIC 150R (FS150R) 2015(G)	No. Seri		Kode Parts Catalog
1	11341-K56-N20	COVER, L. CRANKCASE	1	.....	.....	REPSOL
	11341-K56-N00	.....	1	.....	.....	STANDARD
2	11360-K56-N00	COVER COMP., L. RR.	1			
3	11395-K56-N00	GASKET, L. CRANKCASE COVER	1			
4	32123-K56-N00	GUARD, CHANGE SWITCH CORD	1			
5	90084-K03-N30	CAP, 14MM	1			
6	90087-KGH-900	CAP, 30MM	1			
7	90702-KFM-901	DOWEL PIN, 8X12	2			
8	91323-K56-N00	O-RING, 13.8X2.4	1			
9	91356-KWV-000	O-RING, 30MM	1			
10	96001-06030-00	BOLT, FLANGE, 6X30	7			
11	96001-06035-00	BOLT, FLANGE, 6X35	2			
12	96001-06040-00	BOLT, FLANGE, 6X40	2			

E-11 GENERATOR

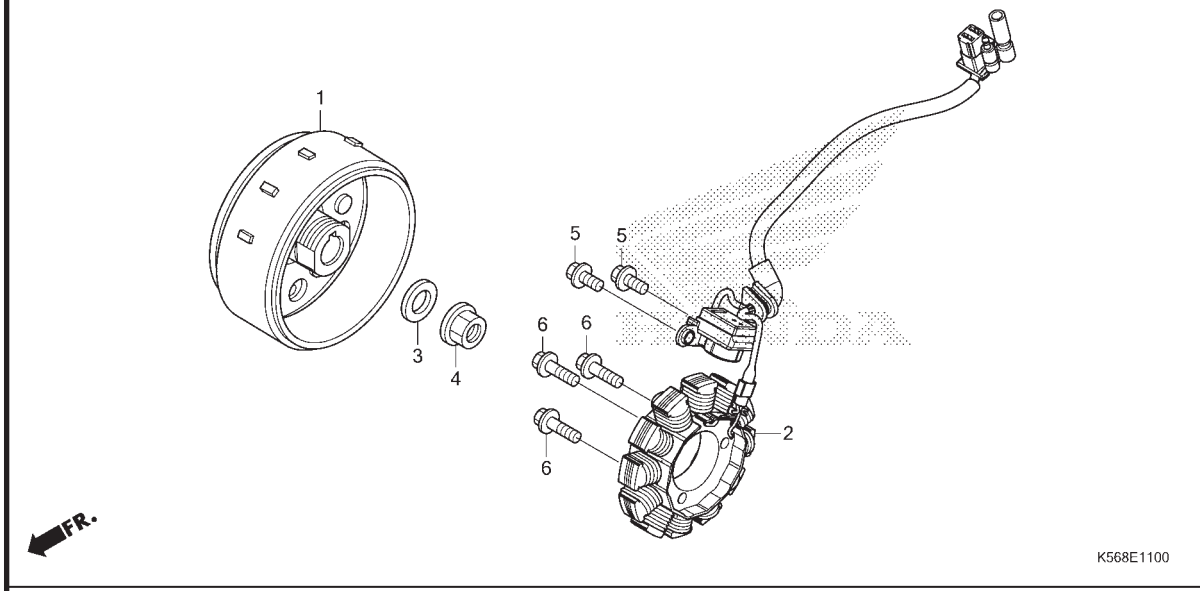

No. Ref.	L.O.N.	(Nomor ref. relatif) Deskripsi	F.R.T.
1	613105	ROTOR ATAU FLYWHEEL.....	0,9
2	6131A3	STATOR.....	0,9

No. Ref.	No. Part	Deskripsi	Jumlah SONIC 150R (FS150R) 2015(G)	No. Seri	Kode Parts Catalog
1	31110-K56-N01	FLYWHEEL COMP.....	1		
2	31120-K56-N01	STATOR COMP.....	1		
3	90439-KWZ-900	WASHER, 12X24X2.3.....	1		
4	94050-12001	NUT, FLANGE, 12MM.....	1		
5	96001-06016-00	BOLT, FLANGE, 6X16.....	2		
6	96001-06025-00	BOLT, FLANGE, 6X25.....	3		

E-12 WATER PUMP

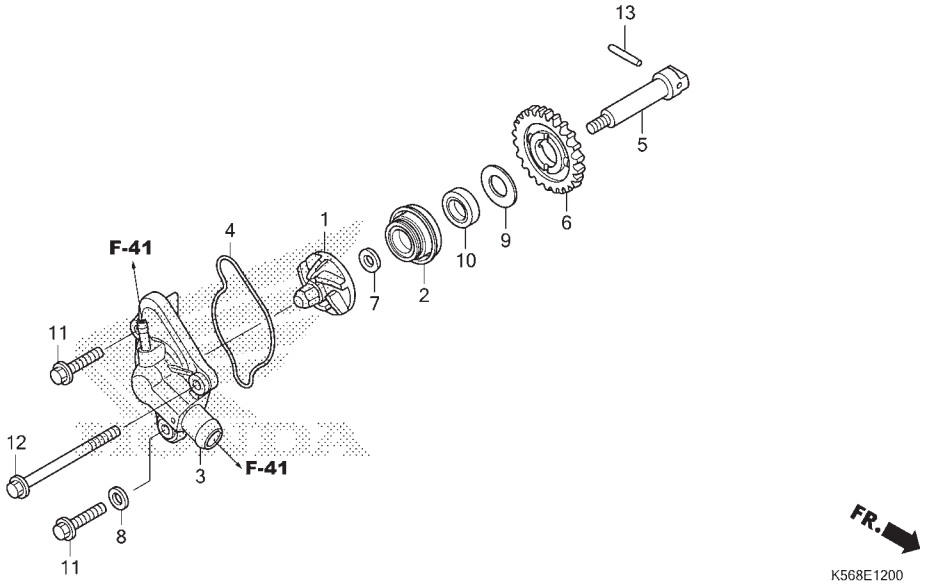

No. Ref.	L.O.N.	(Nomor ref. relatif) Deskripsi	F.R.T.
1	114105	IMPELLER, WATER PUMP.....	1,1
2		(10)	
	114110	MECHANICAL SEAL, WATER PUMP....	1,4
3		(4)	
	1141B0	COVER, WATER PUMP.....	0,6
5	1141E7	SHAFT, WATER PUMP.....	1,2
6	114142	SPROCKET ATAU GEAR, WATER PUMP DRIVEN.....	1,2

No. Ref.	No. Part	Deskripsi	Jumlah SONIC 150R (FS150R) 2015(G)	No. Seri		Kode Parts Catalog
1	19215-KGH-901	IMPELLER, WATER PUMP	1			
2	19217-P72-014	SEAL, MECHANICAL	1			
3	19220-K56-N20	COVER COMP., WATER PUMP	1	.....	.....	REPSOL
	19220-K56-N00	.....	1	.....	.....	STANDARD
4	19226-K56-N00	GASKET, WATER PUMP	1			
5	19241-K56-N00	SHAFT, WATER PUMP	1			
6	19242-K56-N00	GEAR, WATER PUMP DRIVEN(25T) ..	1			
7	90423-KW6-900	WASHER, 7X13X1.2	1			
8	90463-ML7-000	WASHER, SEALING, 6.5MM	1			
9	90608-072-001	WASHER, 12MM	1			
10	91205-KF0-005	OIL SEAL, 12X20X5	1			
11	96001-06022-00	BOLT, FLANGE, 6X22	2			
12	96001-06065-00	BOLT, FLANGE, 6X65	1			
13	96220-40238	ROLLER, 4X23.8	1			

E-13 STARTER MOTOR

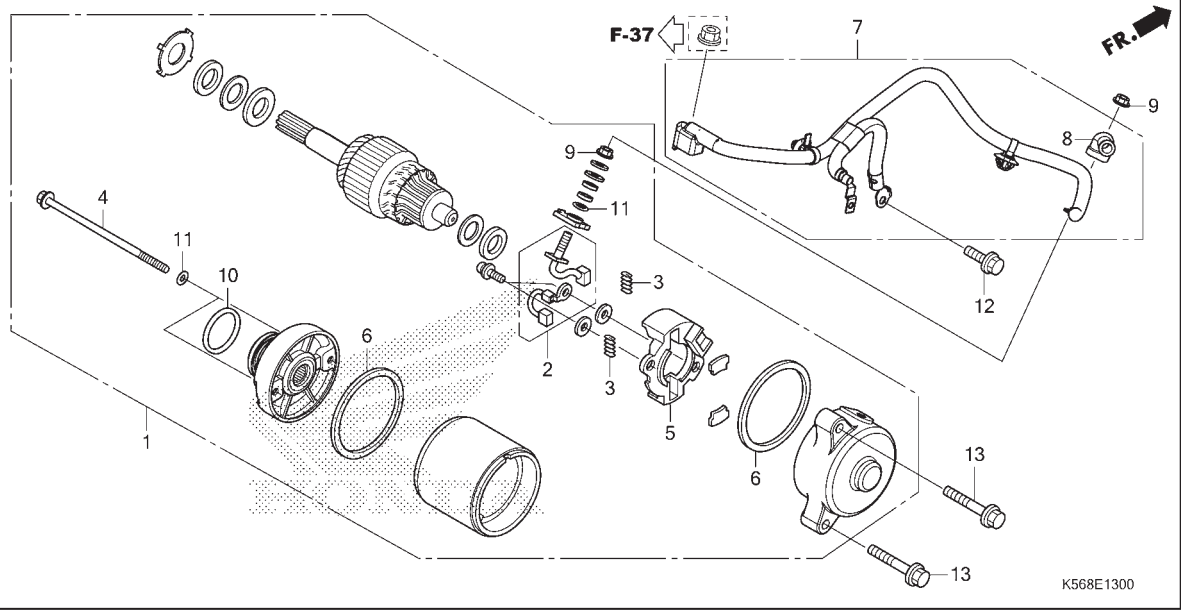

No. Ref.	L.O.N.	(Nomor ref. relatif) Deskripsi	F.R.T.
1		(10)	
	612105	MOTOR, STARTING.....	0,7
2		(3,5,6)	
	6121A4	TERMINAL, BRUSH(STARTER).....	0,9
7	612115	CABLE, STARTER MOTOR.....	0,7

No. Ref.	No. Part	Deskripsi	Jumlah SONIC 150R (FS150R) 2015(G)	No. Seri	Kode Parts Catalog
1	31200-K56-N01	MOTOR ASSY., STARTER	1		
2	31201-KPT-A01	TERMINAL SET, BRUSH	1		
3	31204-KG8-004	SPRING, CARBON BRUSH	2		
4	31205-KTC-921	BOLT, SETTING	2		
5	31206-KPP-T01	HOLDER, BRUSH	1		
6	31207-MBE-009	RING	2		
7	32410-K56-N00	CABLE, STARTER MOTOR & EARTH ..	1		
8	32411-253-001	COVER, STARTER MOTOR TERMINAL .	1		
9	90071-MB0-001	NUT-WASHER, 6MM	2		
10	91309-425-004	O-RING, 24.4X3.1	1		
11	91320-MB0-000	O-RING, 4X2	3		
12	95701-06014-0	BOLT, FLANGE, 6X14	1		
13	95701-06028-01	BOLT, FLANGE, 6X28	2		

E-14 OIL PUMP

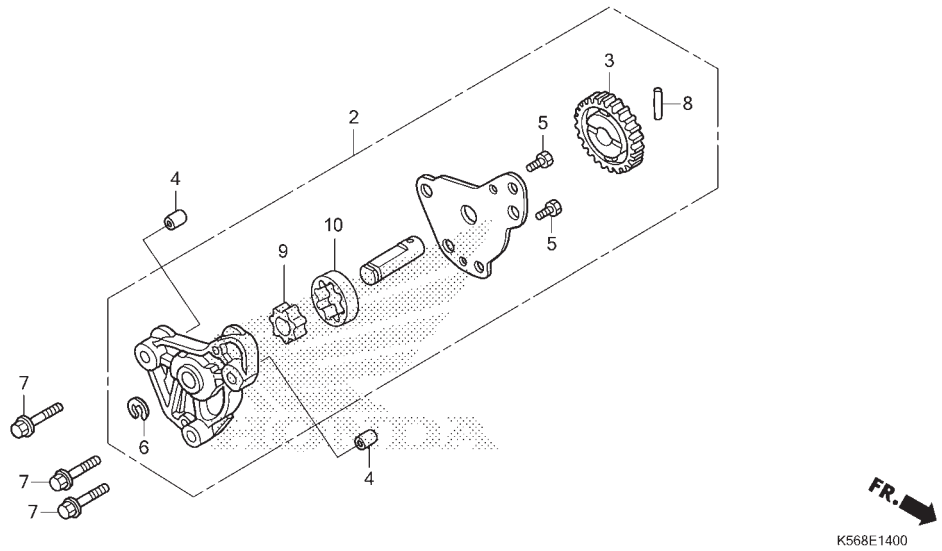

No. Ref.	L.O.N.	(Nomor ref. relatif) Deskripsi	F.R.T.
2	113105	PUMP ASSY., OIL.....	1,1
3	1131C4	GEAR, OIL PUMP DRIVEN.....	1,2

No. Ref.	No. Part	Deskripsi	Jumlah SONIC 150R (FS150R) 2015(G)	No. Seri	Kode Parts Catalog
2	15100-KPP-T01	OIL PUMP ASSY.....	1		
3	15133-KPP-T00	GEAR, OIL PUMP DRIVEN(25T)....	1		
4	90702-KFM-901	DOWEL PIN, 8X12.....	2		
5	93301-05012-0J	BOLT, HEX., 5X12.....	2		
6	94540-06018	E-RING, 6MM.....	1		
7	95701-06035-00	BOLT, FLANGE, 6X35.....	3		
8	96220-40238	ROLLER, 4X23.8.....	1		
9	15331-436-000	ROTOR OIL, PUMP INNER,.....	1		
10	15332-436-000	ROTOR OIL, PUMP OUTER.....	1		

E-15 CRANKCASE

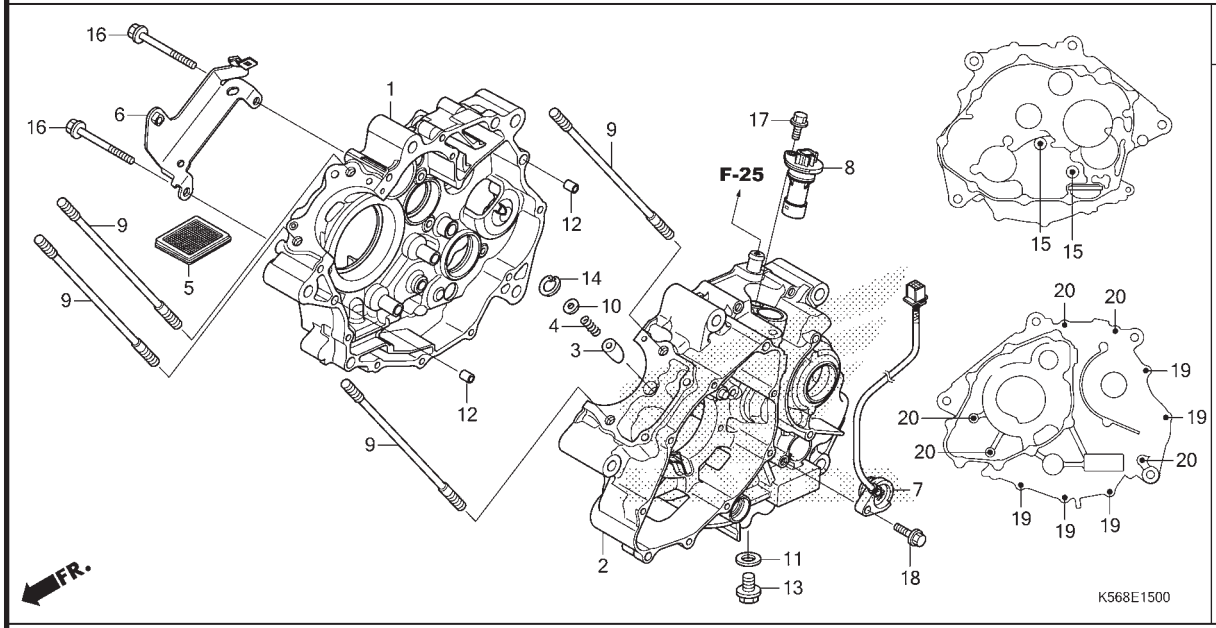

No. Ref.	L.O.N.	(Nomor ref. relatif) Deskripsi	F.R.T.
1	110120	CRANKCASE :RIGHT..... .TERMASUK: Penurunan dan pemasangan mesin	6,7
2	110115	CRANKCASE :LEFT..... .TERMASUK: Penurunan dan pemasangan mesin	6,1
	1101A2	CRANKCASE :KEDUA-DUANYA..... .TERMASUK: Penurunan dan pemasangan mesin	7,5
5	1131B5	SCREEN, OIL FILTER.....	1,1
7	615125	SWITCH, GEAR CHANGE.....	0,7
8	617198	SENSOR, SPEEDOMETER.....	0,7

No. Ref.	No. Part	Deskripsi	Jumlah SONIC 150R (FS150R) 2015(G)	No. Seri	Kode Parts Catalog
1	11100-K56-305	CRANKCASE COMP., R.	1		
2	11200-K56-305	CRANKCASE SET, L.	1		
3	14521-KPP-900	PLUG, BEARING PUSH	1		
4	14531-KPP-900	SPRING, BEARING PUSH	1		
5	15421-KSP-910	SCREEN, OIL FILTER	1		
6	32121-K56-N00	STAY COMP., CABLE	1		
7	35759-K56-N01	CONTACT ASSY., CHANGE SWITCH ..	1		
8	37700-K56-N01	SENSOR ASSY., SPEED	1		
9	90031-K56-N00	BOLT, CYLINDER STUD	4		
10	90403-KPP-900	WASHER, 3X11X1.0	1		
11	90407-259-000	PACKING, DRAIN COCK, 12.5X20 ..	1		
12	90701-HC4-000	DOWEL PIN, 8X12	2		
13	92800-12000	BOLT, DRAIN PLUG, 12MM	1		
14	94520-12000	CIRCLIP, INTERNAL, 12MM	1		
15	95701-06035-00	BOLT, FLANGE, 6X35	2		
16	95701-06065-00	BOLT, FLANGE, 6X65	2		
17	96001-06016-00	BOLT, FLANGE, 6X16	1		
18	96001-06018-00	BOLT, FLANGE, 6X18	1		
19	96001-06040-00	BOLT, FLANGE, 6X40	5		
20	96001-06065-00	BOLT, FLANGE, 6X65	5		

E-16 CRANKSHAFT/PISTON

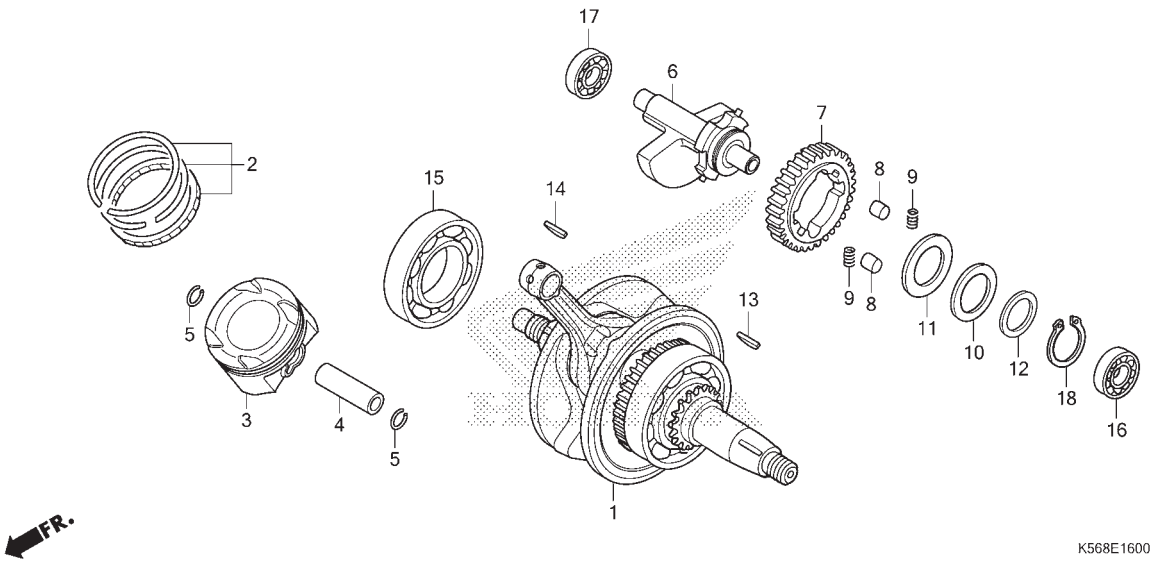

No. Ref.	L.O.N.	(Nomor ref. relatif) Deskripsi	F.R.T.
1	1101B5	CRANKSHAFT.....	5,6
		.TERMASUK: Penurunan dan pemasangan mesin	
3		(2,4,5)	
	111103	PISTON RING DAN/ATAU PISTON(SATU)	2,4
6	110185	SHAFT, BALANCER.....	5,6
		.TERMASUK: Penurunan dan pemasangan mesin	
7		(8,9)	
	1101L5	GEAR, BALANCER DRIVEN.....	5,6
		.TERMASUK: Penurunan dan pemasangan mesin	
15	1101B7	BEARING, CRANKSHAFT :RIGHT.....	5,8
		.TERMASUK: Penurunan dan pemasangan mesin	
16	1101G3	BEARING, BALANCER SHAFT :LEFT..	5,6
		.TERMASUK: Penurunan dan pemasangan mesin	
17	1101G4	BEARING, BALANCER SHAFT :RIGHT	5,8
		.TERMASUK: Penurunan dan pemasangan mesin	

No. Ref.	No. Part	Deskripsi	Jumlah SONIC 150R (FS150R) 2015(G)	No. Seri	Kode Parts Catalog
1	13000-K56-N00	CRANKSHAFT COMP.	1		
2	13011-K56-N00	RING SET, PISTON(STD.)	1		
	13021-K56-N00	RING SET, PISTON(O.S. 0.25) ...	(1)		
	13031-K56-N00	RING SET, PISTON(O.S. 0.50) ...	(1)		
3	13101-K56-N00	PISTON(STD.)	1		
	13102-K56-N00	PISTON(O.S. 0.25)	(1)		
	13103-K56-N00	PISTON(O.S. 0.50)	(1)		
4	13111-K56-N00	PIN, PISTON	1		
5	13115-KZY-701	CLIP, PISTON PIN, 14MM	2		
6	13420-K56-N00	WEIGHT COMP., BALANCER	1		
7	13422-KPP-86Z	GEAR A, BALANCER DRIVEN(43T) (WHITE)	1		
	13423-KPP-860	GEAR B, BALANCER DRIVEN(43T) (BLUE)	1		
	13424-KPP-860	GEAR C, BALANCER DRIVEN(43T) (YELLOW)	1		
8	13425-KGH-900	RUBBER, BALANCER DUMPER(IKP) ..	2		
	13425-KWC-900	RUBBER, BALANCER DUMPER (TT) ..	2		
9	13427-KPP-860	SPRING, BALANCER GEAR	2		
10	13538-KGH-901	SPRING, THRUST	1		
11	90401-KPP-900	WASHER, 28.2X45X1.0	1		
12	90402-KRM-840	WASHER, 28.1X36X1.8	1		
13	90741-KFB-001	KEY, WOODRUFF, 4MM	1		
14	90741-KGH-900	KEY, WOODRUFF, 4MM	1		
15	91001-KPP-901	BEARING, R. RADIAL BALL SPECIAL, 6207	1		

E-16 CRANKSHAFT/PISTON

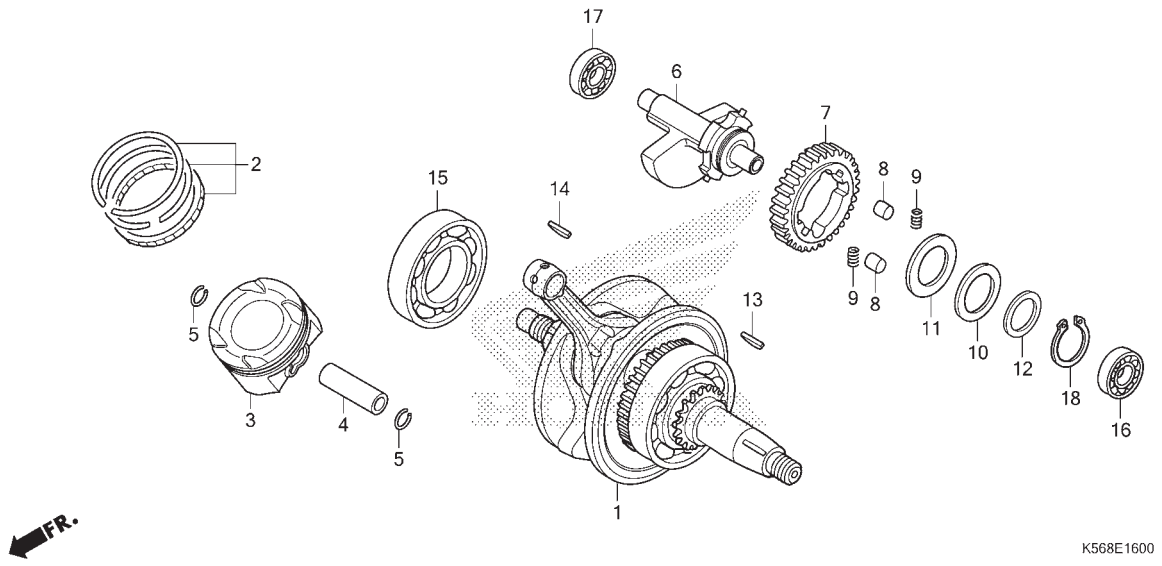

No. Ref.	L.O.N.	(Nomor ref. relatif) Deskripsi	F.R.T.
(17) 1101G5		BEARING, BALANCER SHAFT :KEDUA-DUANYA 6,0 .TERMASUK: Penurunan dan pemasangan mesin	

No. Ref.	No. Part	Deskripsi	Jumlah SONIC 150R (FS150R) 2015(G)	No. Seri	Kode Parts Catalog
16	91003-KPP-931	BEARING, RADIAL BALL, 6201	1		
17	91008-K56-N01	BEARING, RADIAL BALL, 6301	1		
18	94510-28000	CIRCLIP, EXTERNAL, 28MM	1		

E-17 TRANSMISSION

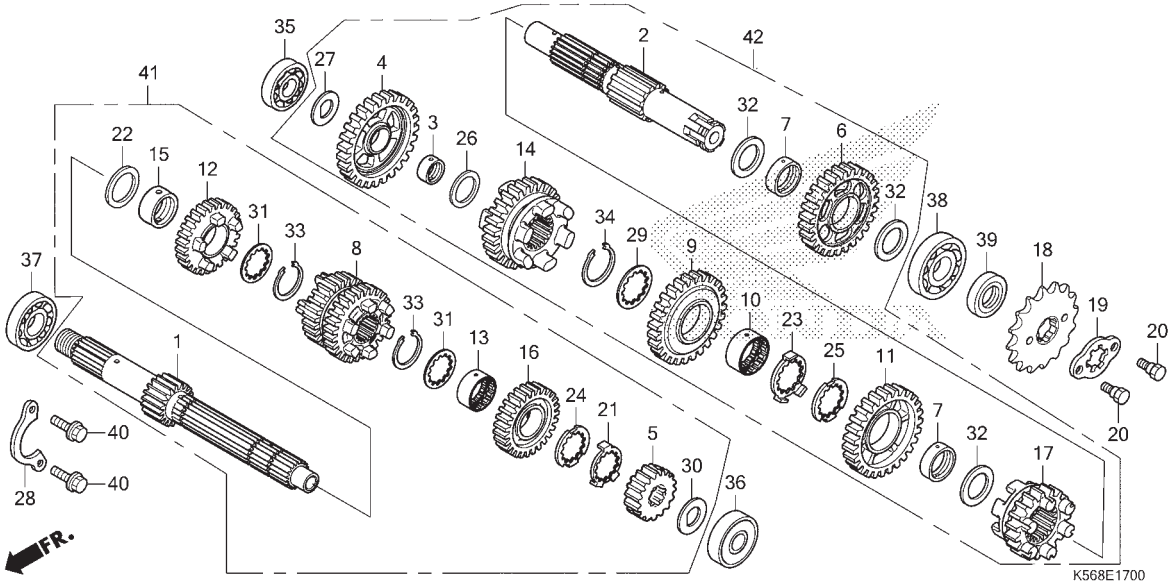

No. Ref.	L.O.N.	(Nomor ref. relatif) Deskripsi	F.R.T.
1		(5,8,12,16)	
	210141	MAINSHAFT, TRANSMISSION.....	5,7
		.TERMASUK: Penurunan dan pemasangan mesin	
	210141A	.Ganti countershaft tambahkan..	0,1
2		(4,6,9,11,14,17)	
	210142	COUNTERSHAFT, TRANSMISSION.....	5,7
		.TERMASUK: Penurunan dan pemasangan mesin	
	210142A	.Ganti mainshaft tambahkan.....	0,1
18	213135	SPROCKET, DRIVE.....	0,2
35	2101C8	BEARING, COUNTERSHAFT :RIGHT...	5,8
		.TERMASUK: Penurunan dan pemasangan mesin	
36	2101C2	BEARING, MAINSHAFT :LEFT.....	5,6
		.TERMASUK: Penurunan dan pemasangan mesin	
37	2101C5	BEARING, MAINSHAFT :RIGHT.....	5,8
		.TERMASUK: Penurunan dan pemasangan mesin	
	2101C6	BEARING, MAINSHAFT :KEDUA-DUANYA	6,0
		.TERMASUK: Penurunan dan pemasangan mesin	

No. Ref.	No. Part	Deskripsi	Jumlah SONIC 150R (FS150R) 2015(G)	No. Seri	Kode Parts Catalog
1	23211-K56-N00	MAINSHAFT(12T)	1		
2	23221-K56-N00	COUNTERSHAFT	1		
3	23415-HB3-000	BUSH, 15MM	1		
4	23421-K56-N00	GEAR, COUNTERSHAFT FIRST(37T) .	1		
5	23431-K56-N00	GEAR, MAINSHAFT SECOND(17T) ...	1		
6	23441-K56-N00	GEAR, COUNTERSHAFT SECOND(33T)	1		
7	23442-K56-N00	BUSH, 20MM	2		
8	23451-K56-N00	GEAR, MAINSHAFT THIRD & FOURTH	1		
9	23461-K56-N00	GEAR, COUNTERSHAFT THIRD(30T)	1		
10	23465-K56-N00	BUSH, SPLINE, 20MM	1		
11	23481-K56-N00	GEAR, COUNTERSHAFT FOURTH(27T)	1		
12	23491-K56-N00	GEAR, MAINSHAFT FIFTH(24T)	1		
13	23492-KSP-910	COLLAR, SPLINE, 17X20X11	1		
14	23501-K56-N00	GEAR, COUNTERSHAFT FIFTH(25T) .	1		
15	23502-KTY-D30	BUSH, 20MM	1		
16	23511-K56-N00	GEAR, MAINSHAFT SIXTH(26T)	1		
17	23521-K56-N01	GEAR, COUNTERSHAFT SIXTH(24T) .	1		
18	23801-KBP-901	SPROCKET, DRIVE(15T)	1		
19	23811-KR3-600	PLATE A2, FIXING	1		
20	90084-041-000	BOLT, DRIVE SPROCKET FIXING ...	2		
21	90401-K56-N00	WASHER, LOCK, 17MM	1		
22	90401-KTY-D30	WASHER, THRUST, 17MM	1		
23	90401-KVK-900	WASHER, LOCK, 20X19X1.0	1		
24	90402-K56-N00	WASHER, SPLINE, 17MM	1		

E-17 TRANSMISSION

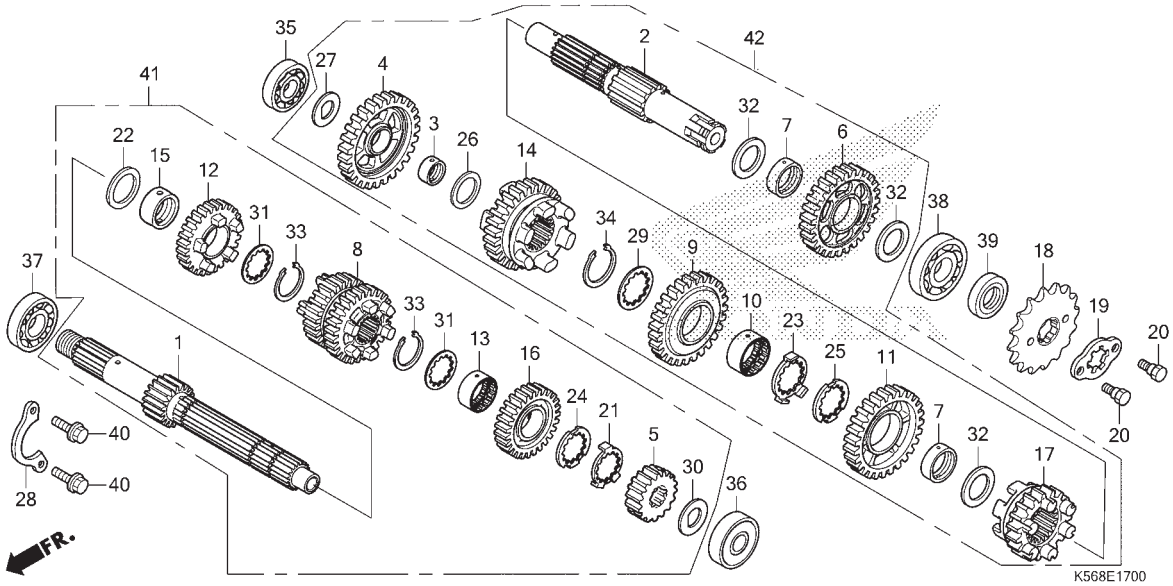

No. Ref.	L.O.N.	(Nomor ref. relatif) Deskripsi	F.R.T.
38	2101C7	BEARING, COUNTERSHAFT :LEFT.... .TERMASUK: Penurunan dan pemasangan mesin	5,6
	2101C9	BEARING, COUNTERSHAFT :KEDUA-DUANYA .TERMASUK: Penurunan dan pemasangan mesin	6,0
	2101D4	BEARING, MAINSHAFT DAN COUNTERSHAFT :SEMUA..... .TERMASUK: Penurunan dan pemasangan mesin	6,2
39	2101G7	OIL SEAL, COUNTERSHAFT :LEFT... .TERMASUK: Penurunan dan pemasangan mesin	5,6

No. Ref.	No. Part	Deskripsi	Jumlah SONIC 150R (FS150R) 2015(G)	No. Seri	Kode Parts Catalog
25	90402-KVK-900	WASHER, THRUST, 20X19X1.0	1		
26	90412-187-001	WASHER, THRUST, 15MM	1		
27	90412-K56-N00	WASHER, SPECIAL, 15MM	1		
28	90441-KW7-931	PLATE, BEARING HOLDER	1		
29	90451-K56-N00	WASHER, SPLINE, 20MM	1		
30	90452-KGH-901	WASHER, SPECIAL, 12MM	1		
31	90452-KRM-840	WASHER, SPLINE, 17X23X1.6	2		
32	90454-KPH-900	WASHER, 25X20.2X1	3		
33	90601-KRM-840	CIRCLIP, 17MM	2		
34	90605-KVS-900	SET RING, 20MM	1		
35	91004-K56-N01	BEARING, RADIAL BALL, 6202U ...	1		
36	91005-K56-N01	BEARING, RADIAL BALL, 6201U ...	1		
37	91006-K56-N01	BEARING, RADIAL BALL, 6203 (SK)	1		
	91006-K56-N02	BEARING, RADIAL BALL, 6203 (FK)	1		
38	91010-K56-N01	BEARING, RADIAL BALL, 6204	1		
39	91216-KGH-902	OIL SEAL, 20X34X7	1		
40	95701-06014-0	BOLT, FLANGE, 6X14	2		
41	23010-K56-N01	SHAFT ASSY., MAIN	1		
42	23020-K56-N02	SHAFT ASSY., COUNTER	1		

E-19 GEARSHIFT DRUM

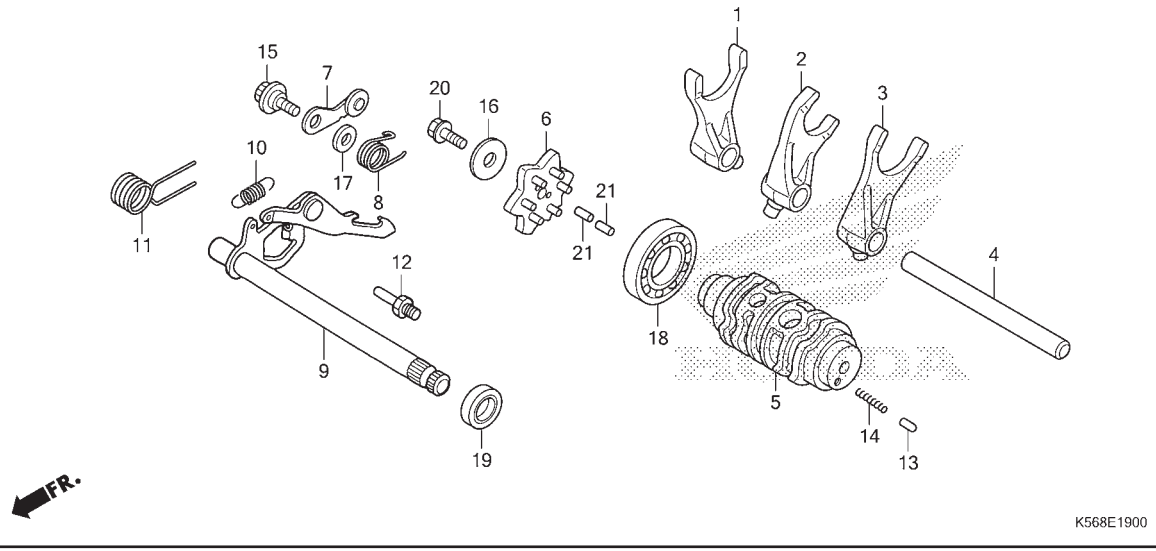

No. Ref.	L.O.N.	(Nomor ref. relatif) Deskripsi	F.R.T.
1		(2,3)	
	210112	FORK, GEARSHIFT.....	5,6
		.TERMASUK: Penurunan dan pemasangan mesin	
		.CATATAN: Waktu sama untuk dua unit atau lebih	
5	2101A9	DRUM, GEARSHIFT.....	5,6
		.TERMASUK: Penurunan dan pemasangan mesin	
6	2101D6	PLATE, GEARSHIFT DRUM STOPPER..	1,1
7		(8)	
	210125	STOPPER ATAU SPRING, SHIFT DRUM	1,1
9		(11)	
	210122	SPINDLE, GEARSHIFT.....	1,6
18	2101C3	BEARING, GEARSHIFT DRUM.....	5,8
		.TERMASUK: Penurunan dan pemasangan mesin	
19	1101F9	OIL SEAL, GEARSHIFT SPINDLE....	1,6

No. Ref.	No. Part	Deskripsi	Jumlah SONIC 150R (FS150R) 2015(G)	No. Seri	Kode Parts Catalog
1	24211-K56-N00	FORK, R. GEARSHIFT	1		
2	24212-KPP-901	FORK, CENTER GEARSHIFT	1		
3	24213-K56-N00	FORK, L. GEARSHIFT	1		
4	24241-KPP-901	SHAFT, GEARSHIFT FORK	1		
5	24301-K56-N00	DRUM, GEARSHIFT	1		
6	24410-K15-900	PLATE COMP., SHIFT DRUM	1		
7	24430-K56-N00	STOPPER COMP., GEARSHIFT DRUM .	1		
8	24436-KTY-D30	SPRING, GEARSHIFT DRUM STOPPER	1		
9	24610-KPP-900	SPINDLE COMP., GEARSHIFT	1		
10	24641-KBP-901	SPRING, GEARSHIFT ARM	1		
11	24651-KTY-D30	SPRING, GEARSHIFT RETURN	1		
12	24652-035-000	PIN, SHIFT RETURN SPRING	1		
13	35751-KPH-900	CAP, CHANGE SWITCH CONTACT	1		
14	35752-KPH-900	SPRING, CHANGE SWITCH CONTACT .	1		
15	90022-MG8-000	PIVOT, SHIFT DRUM STOPPER ARM .	1		
16	90402-KW7-901	WASHER, THRUST, 6MM	1		
17	90435-HB3-000	WASHER, 6.1MM	1		
18	91009-K31-901	BEARING, RADIAL BALL, 6905 (NK)	1		
	91015-K56-N01	BEARING, RADIAL BALL, 6905 (SK)	1		
19	91209-KWC-901	OIL SEAL, 12X22X7	1		
20	95701-06016-00	BOLT, FLANGE, 6X16	1		
21	96220-30086	ROLLER, 3X8.5	2		

E-20 KICK STARTER SPINDLE

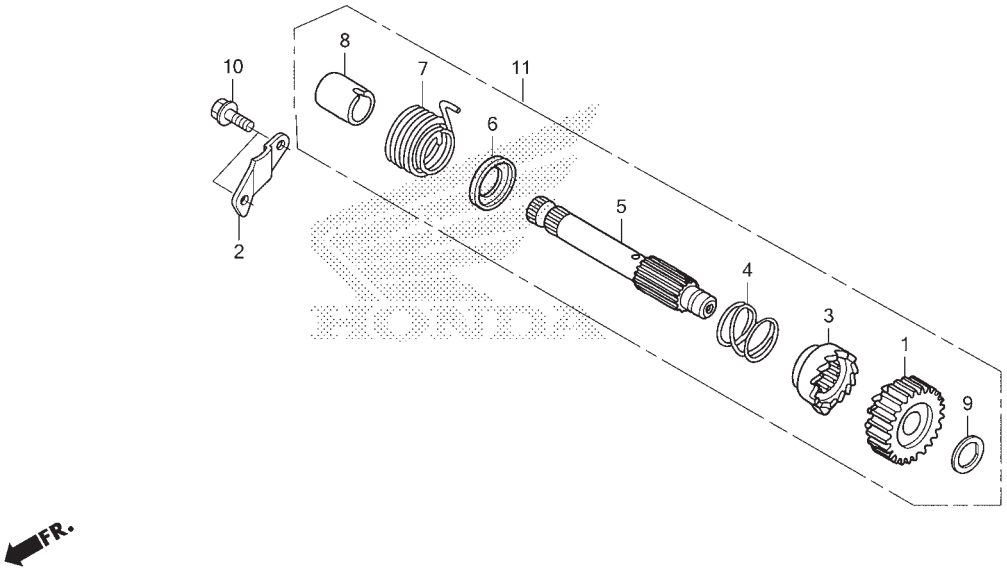

No. Ref.	L.O.N.	(Nomor ref. relatif) Deskripsi	F.R.T.
1		(3,4)	
	1121A0	PINION, KICK STARTER.....	1,1
5	1121A2	SPINDLE, KICK STARTER.....	1,1
7	112103	SPRING, KICK STARTER RETURN....	1,1

No. Ref.	No. Part	Deskripsi	Jumlah SONIC 150R (FS150R) 2015(G)	No. Seri	Kode Parts Catalog
1	28211-K56-N00	PINION, KICK STARTER(22T)	1		
2	28215-KGH-901	PLATE, KICK STOPPER	1		
3	28221-K56-N00	RATCHET, STARTER DRIVE	1		
4	28223-KM7-702	SPRING, RATCHET	1		
5	28251-K15-900	SPINDLE, KICK STARTER	1		
6	28254-437-001	SEAT, RATCHET SPRING	1		
7	28261-KGH-901	SPRING, KICK RETURN	1		
8	28282-KGH-901	COLLAR, KICK SPRING	1		
9	90451-KGH-901	WASHER, SPECIAL, 14MM	1		
10	95701-06016-00	BOLT, FLANGE, 6X16	2		
11	28200-K56-N00	KICK STARTER ASSY.	1		

E-23 THROTTLE BODY

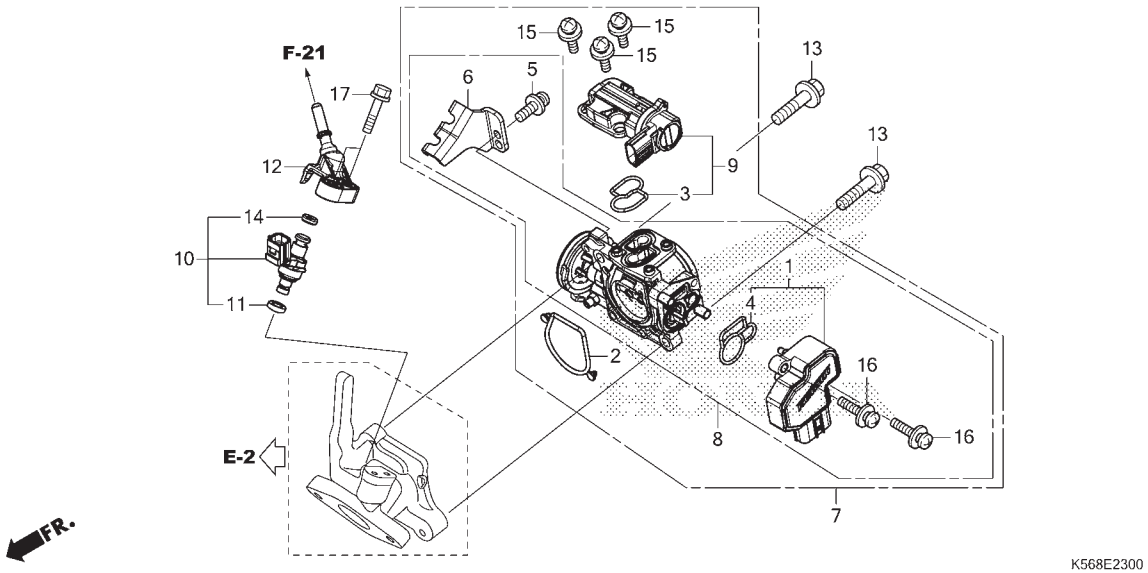

No. Ref.	L.O.N.	(Nomor ref. relatif) Deskripsi	F.R.T.
1		(4)	
	617115	SENSOR, THROTTLE.....	0,8
7		(2)	
	311132	BODY ASSY., THROTTLE.....	0,8
8	311130	BODY, THROTTLE.....	0,8
9		(3)	
	3111N5	VALVE, IDLE AIR CONTROL.....	0,5
10		(11,12,14)	
	311145	INJECTOR, FUEL.....	0,7

No. Ref.	No. Part	Deskripsi	Jumlah SONIC 150R (FS150R) 2015(G)	No. Seri	Kode Parts Catalog
1	16060-KVS-J01	SENSOR SET	1		
2	16075-K40-F01	O-RING, THROTTLE BODY	1		
3	16076-K35-V01	O-RING	1		
4	16077-K35-V01	O-RING	1		
5	16081-K56-N01	SCREW-WASHER, TORX(5X12)	1		
6	16169-K56-N01	STAY, WIRE	1		
7	16400-K56-N01	THROTTLE BODY ASSY.(GQ1LA A) ..	1		
8	16410-K56-N01	BODY SET	1		
9	16430-K56-N01	VALVE SET, IDLE AIR CONTROL ...	1		
10	16450-K56-N01	INJECTOR ASSY., FUEL	1		
11	16472-KPC-D51	RING, SEAL	1		
12	17560-K56-N00	JOINT COMP., INJECTOR	1		
13	90004-GHB-671	BOLT, FLANGE, 6X25	2		
14	91301-GGL-J02	O-RING, 6.3X2.2	1		
15	93891-04010-18	SCREW-WASHER, 4X10	3		
16	93891-04016-18	SCREW-WASHER, 4X16	2		
17	95701-06022-01	BOLT, FLANGE, 6X22	2		

F-1 HEADLIGHT

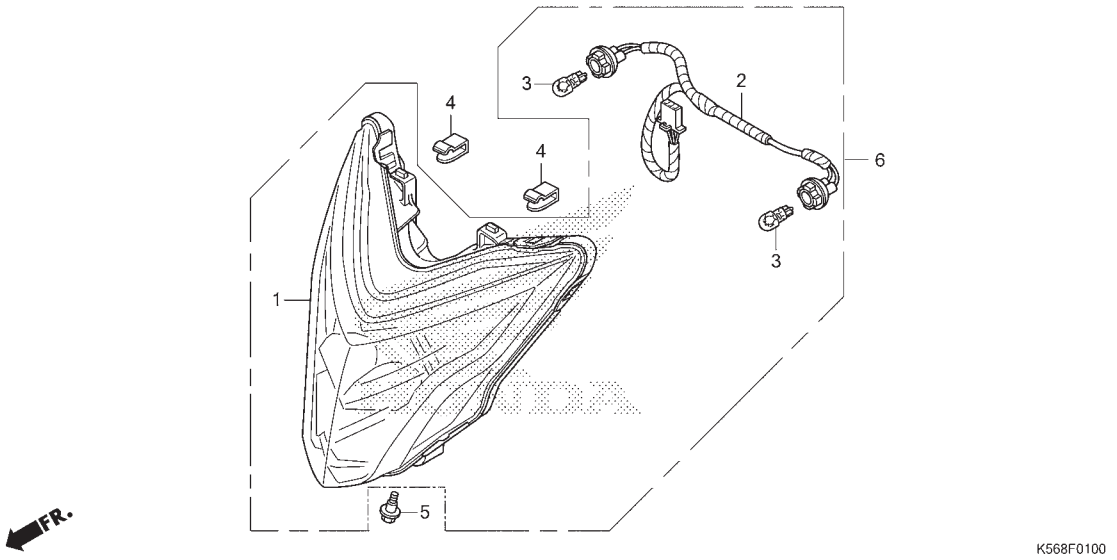

No. Ref.	L.O.N.	(Nomor ref. relatif) Deskripsi	F.R.T.
1	6161A7	HEADLIGHT UNIT.....	0,5
2	6161AA	SOCKET, WINKER :FRONT.....	0,3
3	616133	BULB, WINKER :FRONT.....	0,2
		.CATATAN: Waktu sama untuk dua unit	
	6161G0	BULB, WINKER :UNTUK 1 KENDARAAN	0,2

No. Ref.	No. Part	Deskripsi	Jumlah SONIC 150R (FS150R) 2015(G)	No. Seri	Kode Parts Catalog
1	33110-K56-N01	HEADLIGHT UNIT	1		
2	33150-K56-N01	SOCKET COMP., WINKER LIGHT	1		
3	34905-KSS-C02	BULB, WINKER(12V 10W)(AMBER) ...	2		
4	53209-GAH-000	CLIP, HEADLIGHT	2		
5	90101-KZL-930	BOLT, ADJUSTING	1		
6	33100-K56-N01	LIGHT ASSY., HEAD	1		

F-2 METER

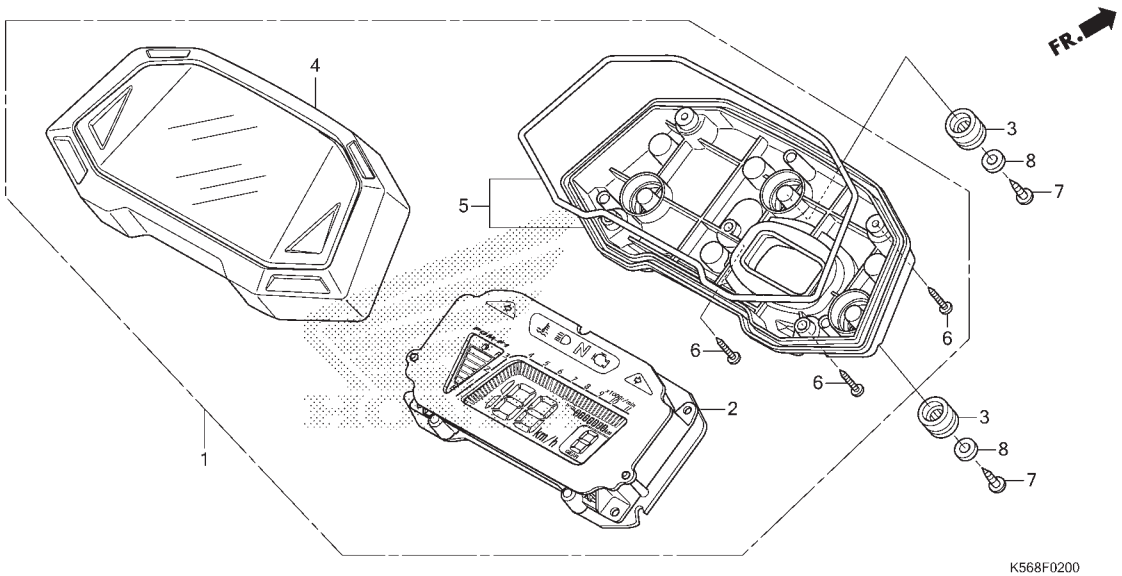

No. Ref.	L.O.N.	(Nomor ref. relatif) Deskripsi	F.R.T.
1	8121A1	METER ASSY., COMBINATION.....	O,3
2	8121A2	METER, COMBINATION.....	O,4
4	8121B4	CASE, METER :UPPER.....	O,3
5	8121B5	CASE, METER :LOWER.....	O,3

No. Ref.	No. Part	Deskripsi	Jumlah SONIC 150R (FS150R) 2015(G)	No. Seri	Kode Parts Catalog
1	37100-K56-N01	METER ASSY., COMBINATION(KPH) ..	1		
2	37130-K56-N00	METER COMP., LCD	1		
3	37215-KZZ-900	RUBBER, METER SETTING	3		
4	37610-K56-N00	CASE ASSY., UPPER	1		
5	37620-K56-N00	CASE ASSY., UNDER	1		
6	93903-22520	SCREW, TAPPING, 3X20	5		
7	93913-25381	SCREW, TAPPING, 5X14(PO)	3		
8	94103-0570	WASHER, PLAIN, 5MM	3		

F-3 MIRROR

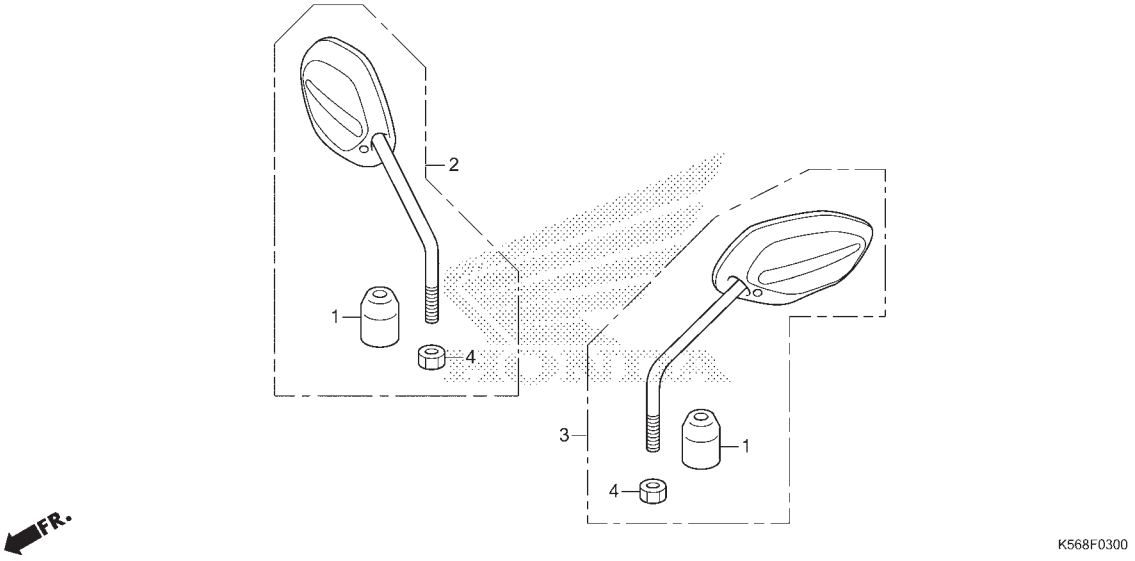

No. Ref.	L.O.N.	(Nomor ref. relatif) Deskripsi	F.R.T.
		TIDAK ADA INFORMASI	

No. Ref.	No. Part	Deskripsi	Jumlah SONIC 150R (FS150R) 2015(G)	No. Seri	Kode Parts Catalog
1	88113-KCJ-660	CAP, LOCK NUT	2		
2	88110-K56-N00	MIRROR ASSY., R. BACK	1		
3	88120-K56-N00	MIRROR ASSY., L. BACK	1		
4	94002-10000-0S	NUT, HEX., 10MM	2		

3

F-4 HANDLE LEVER/SWITCH/CABLE

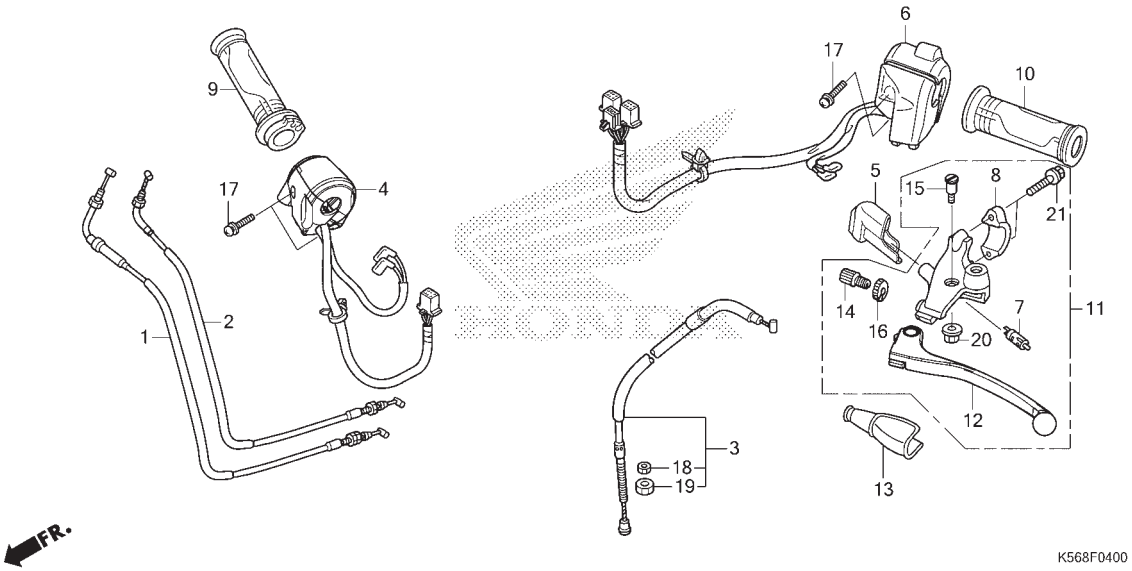

No. Ref.	L.O.N.	(Nomor ref. relatif) Deskripsi	F.R.T.
1		(2)	
	811100	CABLE, THROTTLE.....	0,8
		.CATATAN: Waktu sama untuk dua unit	
3	811115	CABLE, CLUTCH.....	0,6
4	615116	SWITCH, STARTER.....	0,5
6	615118	SWITCH, WINKER.....	0,5
7	6151A9	SWITCH, CLUTCH.....	0,4
9	810150	GRIP, THROTTLE.....	0,3
10	8101C0	GRIP, HANDLE :LEFT.....	0,1
11	8101C8	BRACKET, HANDLE LEVER :LEFT....	0,3
		CATATAN: Tidak termasuk	
		No. Ref. 7,8,12,14,15,16,20,21	
12	8101C6	LEVER, HANDLE :LEFT.....	0,2
	8101F5	LEVER, HANDLE :KEDUA-DUANYA....	0,3

No. Ref.	No. Part	Deskripsi	Jumlah SONIC 150R (FS150R) 2015(G)	No. Seri	Kode Parts Catalog
1	17910-K56-N00	CABLE COMP. A, THROTTLE	1		
2	17920-K56-N00	CABLE COMP. B, THROTTLE	1		
3	22870-K56-N00	CABLE COMP., CLUTCH	1		
4	35150-K56-N01	SWITCH ASSY., STARTER	1		
5	35152-KRY-971	COVER, CLUTCH SWITCH	1		
6	35200-K56-N01	SWITCH ASSY., WINKER	1		
7	35330-413-003	SWITCH COMP., FR. LEVER	1		
8	45517-166-007	HOLDER, MASTER CYLINDER	1		
9	53140-K15-900	GRIP COMP., THROTTLE	1		
10	53166-KYJ-901	GRIP, L. HANDLE	1		
11	53170-KYE-900	LEVER ASSY., HANDLE	1		
12	53178-KYE-900	LEVER COMP., L. HANDLE	1		
13	53180-425-010	BOOT, HANDLE LEVER	1		
14	53192-349-690	BOLT, CLUTCH WIRE ADJUSTING	1		
15	90113-438-000	BOLT, L. STEERING HANDLE LEVER PIVOT	1		
16	90321-MR8-001	NUT, FIXING	1		
17	93892-05020-07	SCREW-WASHER, 5X20	4		
18	94002-08000-0S	NUT, HEX., 8MM	1		
19	94030-08000	NUT, HEX., 8MM	1		
20	94050-06000	NUT, FLANGE, 6MM	1		
21	96001-06022-07	BOLT, FLANGE, 6X22	2		

F-5 FRONT BRAKE MASTER CYLINDER

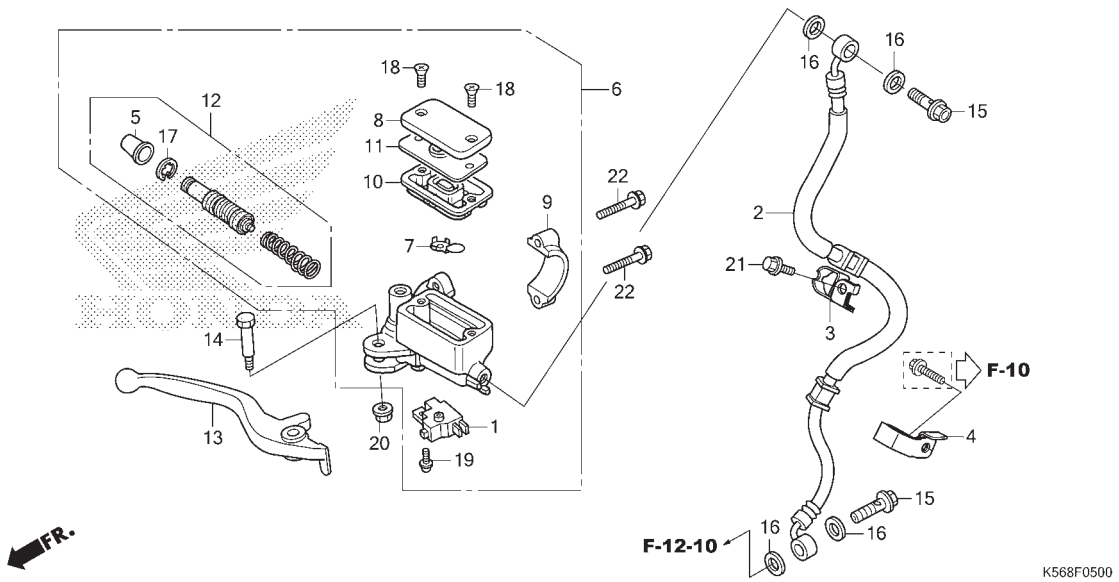

No. Ref.	L.O.N.	(Nomor ref. relatif) Deskripsi	F.R.T.
1	6151B2	SWITCH, FRONT STOP.....	0,2
2	7121A0	HOSE, FRONT BRAKE.....	0,4
		.TERMASUK: Pembuangan angin palsu	
6	71210S	CYLINDER, FRONT BRAKE MASTER...	0,5
		.TERMASUK: Pembuangan angin palsu	
10	7121G6	DIAPHRAGM, FRONT BRAKE MASTER CYLINDER.....	0,1
12	7121G9	PISTON SET, FRONT BRAKE MASTER	0,4
		.TERMASUK: Pembuangan angin palsu	
13	8101C7	LEVER, HANDLE :RIGHT.....	0,1
	8101F5	LEVER, HANDLE :KEDUA-DUANYA....	0,3

No. Ref.	No. Part	Deskripsi	Jumlah SONIC 150R (FS150R) 2015(G)	No. Seri	Kode Parts Catalog
1	35340-KWB-601	SWITCH ASSY., FR. STOP	1		
2	45126-K56-N01	HOSE COMP., FR. BRAKE	1		
3	45155-K56-N00	CLAMPER A, FR. BRAKE HOSE	1		
4	45156-K56-N00	CLAMPER B, FR. BRAKE HOSE	1		
5	45504-410-004	BOOT COMP.	1		
6	45510-KZY-702	CYLINDER SUB ASSY., FR. BRAKE MASTER	1		
7	45512-MA6-007	PROTECTOR	1		
8	45513-HA2-007	CAP, MASTER CYLINDER	1		
9	45517-166-007	HOLDER, MASTER CYLINDER	1		
10	45520-GE2-007	DIAPHRAGM	1		
11	45521-K21-902	PLATE, DIAPHRAGM	1		
12	45530-471-831	CYLINDER SET, MASTER	1		
13	53175-KSP-B51	LEVER, R. STEERING HANDLE	1		
14	90114-KGH-900	BOLT, HANDLE LEVER PIVOT	1		
15	90145-GAZ-981	BOLT, OIL, 10X22	2		
16	90545-300-000	WASHER, OIL BOLT	4		
17	90651-MA5-672	CIRCLIP	1		
18	93600-04012-1G	SCREW, FLAT, 4X12	2		
19	93893-04012-17	SCREW-WASHER, 4X12	1		
20	94050-0600	NUT, FLANGE, 6MM	1		
21	96001-06012-07	BOLT, FLANGE, 6X12	1		
22	96001-06022-07	BOLT, FLANGE, 6X22	2		

F-7 HANDLE PIPE/TOP BRIDGE

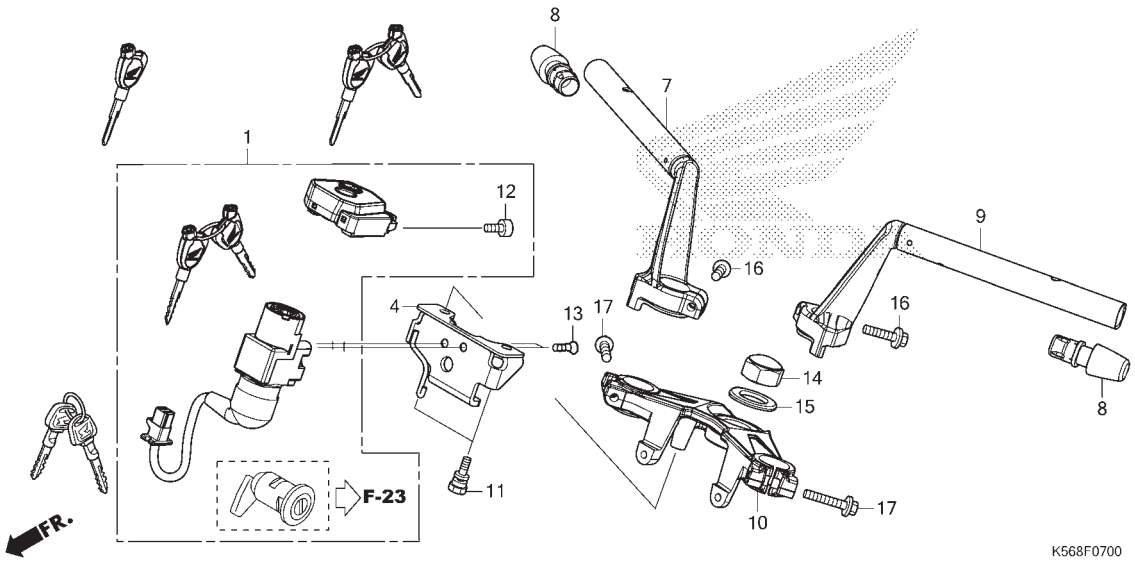

No. Ref.	L.O.N.	(Nomor ref. relatif) Deskripsi	F.R.T.
1	6151A1	KEY SET.....	0,7
7	8101B1	PIPE, STEERING HANDLE :RIGHT...	0,3
9	8101B0	PIPE, STEERING HANDLE :LEFT....	0,3
	8101B2	PIPE, STEERING HANDLE : KEDUA-DUANYA.....	0,5
10	510110	BRIDGE, FORK TOP.....	0,4

No. Ref.	No. Part	Deskripsi	Jumlah SONIC 150R (FS150R) 2015(G)	No. Seri	Kode Parts Catalog
1	35010-K56-N00	KEY SET	1		
4	35105-K56-N00	STAY, COMBINATION SWITCH	1		
7	53100-K56-N00	PIPE, R. STEERING HANDLE	1		
8	53105-K56-N00	END, STEERING HANDLE	2		
9	53150-K56-N00	PIPE, L. STEERING HANDLE	1		
10	53230-K56-N00ZA	BRIDGE, FORK TOP *NH255M* SHIMMER SILVER METALLIC	1		
11	90107-KPP-860	BOLT, BREAK OFF	2		
12	90111-MR5-000	BOLT, SOCKET, 5X9	1		
13	90164-KZL-A00	SCREW, U-LOCK FLAT, 6X12	2		
14	90304-KSP-901	NUT, STEERING STEM	1		
15	90503-KSP-900	WASHER, STEERING STEM	1		
16	95701-08032-00	BOLT, FLANGE, 8X32	2		
17	95701-08040-01	BOLT, FLANGE, 8X40	2		

F-9 STEERING STEM

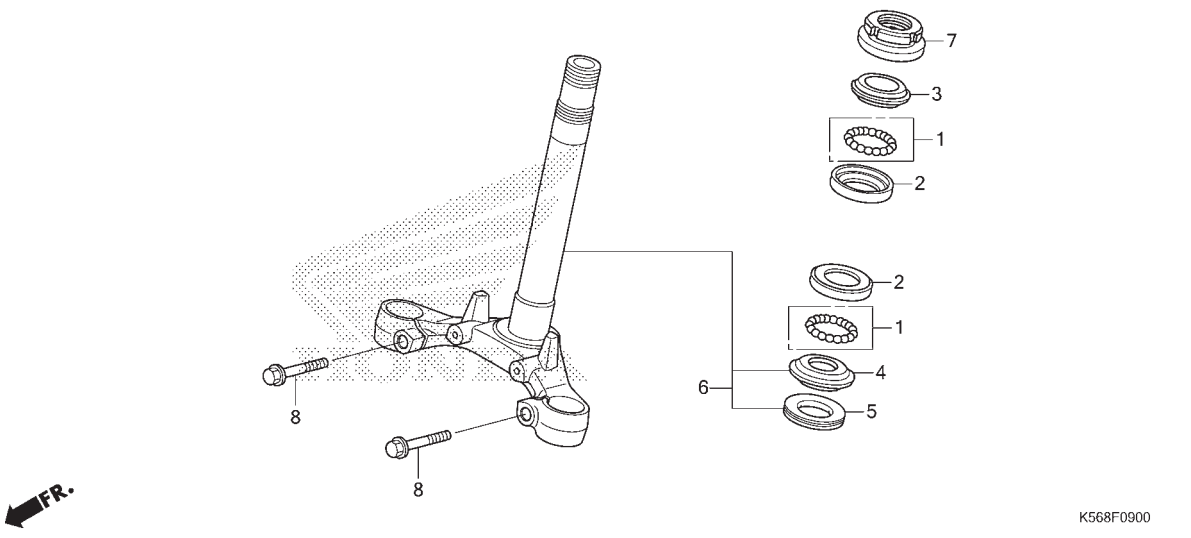

No. Ref.	L.O.N.	(Nomor ref. relatif) Deskripsi	F.R.T.
2		(1)	
	5101A0	RACE, STEERING BALL :UPPER.....	1,0
	5101A1	RACE, STEERING BALL :LOWER.....	1,2
	5101C9	RACE, STEERING BALL : KEDUA-DUANYA.....	1,2
3	5101A9	RACE, STEERING TOP CONE.....	1,0
4		(1,5)	
	5101B0	RACE, STEERING BOTTOM CONE.....	1,2
6	510100	STEM ATAU SHAFT ASSY., STEERING CATATAN: Termasuk No. Ref. 1,2	1,0
7	5101B2	THREAD, STEERING HEAD TOP.....	0,8

No. Ref.	No. Part	Deskripsi	Jumlah SONIC 150R (FS150R) 2015(G)	No. Seri	Kode Parts Catalog
1	06531-KW6-840	BALL ASSY., STEEL, #8X18	2		
2	50301-KTR-900	RACE, STEERING TOP BALL	2		
3	53211-268-011	RACE, STEERING TOP CONE	1		
4	53212-200-000	RACE, STEERING BOTTOM CONE	1		
5	53214-200-000	DUST SEAL, STEERING HEAD	1		
6	5320A-K56-N00	STEM, STEERING	1		
7	5322D-KSP-860	THREAD COMP., STEERING HEAD	1		
8	95701-08035-00	BOLT, FLANGE, 8X35	2		

F-10 FRONT FENDER

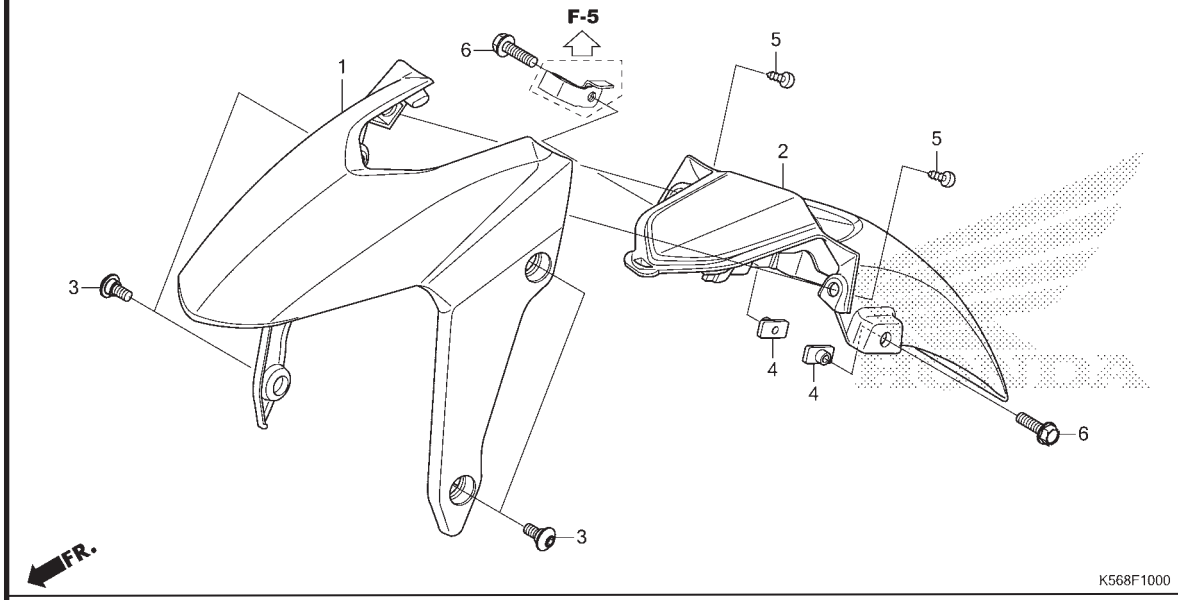

No. Ref.	L.O.N.	(Nomor ref. relatif) Deskripsi	F.R.T.
1	413103	FENDER A, FRONT.....	0,2
2	413104	FENDER B, FRONT.....	0,2

No. Ref.	No. Part	Deskripsi	Jumlah SONIC 150R (FS150R) 2015(G)	No. Seri		Kode Parts Catalog
1	61100-K56-N00FMB	FENDER A, FR.(WL)				
		NH1 .....BLACK	1	.....	.....	REPSOL,STANDARD
	61100-K56-N00SMM	*RP195* .SPACE MAGENTA METALLIC	1	.....	.....	STANDARD
	61100-K56-N00WRD	*R258* .....WINNING RED	1	.....	.....	STANDARD
	61100-K56-N00RSW	*NH196* .....ROSS WHITE	1	.....	.....	STANDARD
2	61200-K56-N00	FENDER B, FR.	1			
3	90133-K56-N00	SCREW, PAN, 6X14	4			
4	90301-K03-N30	NUT, SPECIAL, 6MM	2			
5	93904-25210	SCREW, TAPPING, 5X12	2			
6	96001-06025-08	BOLT, FLANGE, 6X25	2			

3

F-11 FRONT FORK

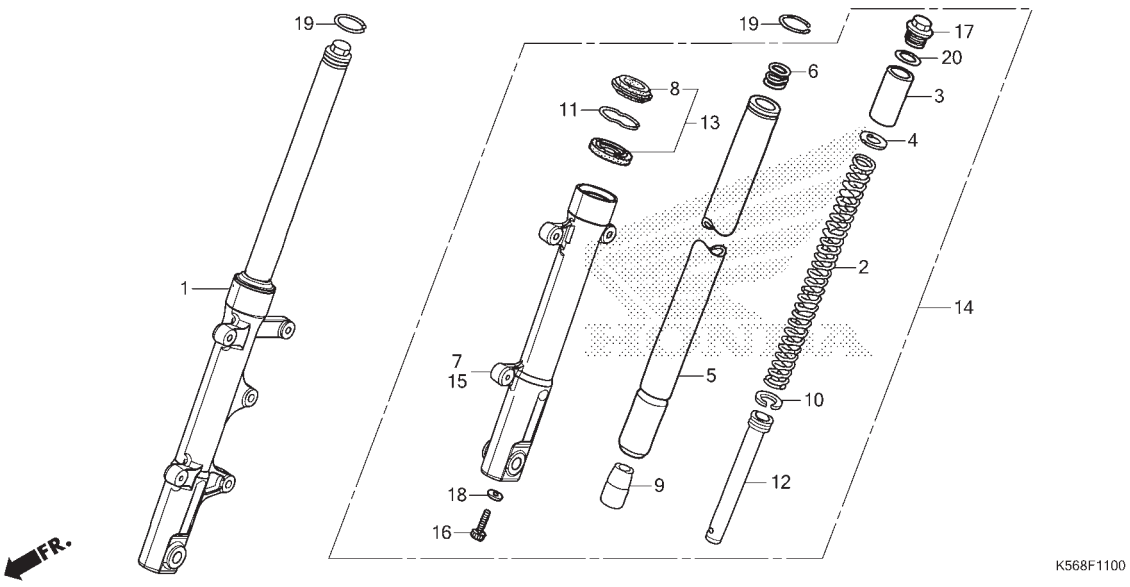

No. Ref.	L.O.N.	(Nomor ref. relatif) Deskripsi	F.R.T.
1	5111C3	FORK ASSY., FRONT :RIGHT.....	0,3
2	5111C5	SPRING, FRONT FORK :LEFT.....	0,5
	5111C6	SPRING, FRONT FORK :RIGHT.....	0,5
	5111C7	SPRING, FRONT FORK : KEDUA-DUANYA.....	0,8
5		(6,9,10,12)	
	5111G2	PIPE, FRONT FORK :LEFT.....	0,6
	5111G3	PIPE, FRONT FORK :RIGHT.....	0,6
	5111G4	PIPE, FRONT FORK :KEDUA-DUANYA	1,0
7	5111D2	CASE, BOTTOM :RIGHT.....	0,7
13	5111E7	SEAL SET, FRONT FORK :LEFT.....	0,6
	5111E8	SEAL SET, FRONT FORK :RIGHT....	0,6
	5111E9	SEAL SET, FRONT FORK : KEDUA-DUANYA.....	1,0
14	5111C2	FORK ASSY., FRONT :LEFT.....	0,3
	5111C4	FORK ASSY., FRONT :KEDUA-DUANYA	0,4
15	5111D1	CASE, BOTTOM :LEFT.....	0,7
	5111D3	CASE, BOTTOM :KEDUA-DUANYA.....	1,2

No. Ref.	No. Part	Deskripsi	Jumlah SONIC 150R (FS150R) 2015(G)	No. Seri	Kode Parts Catalog
1	51400-K56-N01	FORK ASSY., R. FR.	1		
2	51401-K56-N01	SPRING, FR. FORK	2		
3	51402-K56-N01	COLLAR, SPRING	2		
4	51403-GF4-003	JOINT, FR. CUSHION SPRING	2		
5	51410-K56-N01	PIPE COMP., FR. FORK	2		
6	51412-GN5-901	SPRING, REBOUND	2		
7	51420-K56-N01	CASE, R. FR. BOTTOM	1		
8	51425-GN5-901	SEAL, DUST	2		
9	51432-KGH-902	PIECE, OIL LOCK	2		
10	51437-GM0-003	RING, PISTON	2		
11	51466-065-901	RING, OIL SEAL STOPPER	2		
12	51470-K56-N01	PIPE, SEAT	2		
13	51490-KWZ-901	SEAL SET, FR. FORK	2		
14	51500-K56-N01	FORK ASSY., L. FR.	1		
15	51520-K56-N01	CASE, L. FR. BOTTOM	1		
16	90116-KV3-702	BOLT, SOCKET, 8MM	2		
17	90123-KW7-901	BOLT, FORK	2		
18	90544-283-000	WASHER, SPECIAL, 8MM	2		
19	90651-KW7-900	RING, SNAP	2		
20	91256-166-003	O-RING, 16.8X2.4	2		

F-12-10 FRONT BRAKE CALIPER

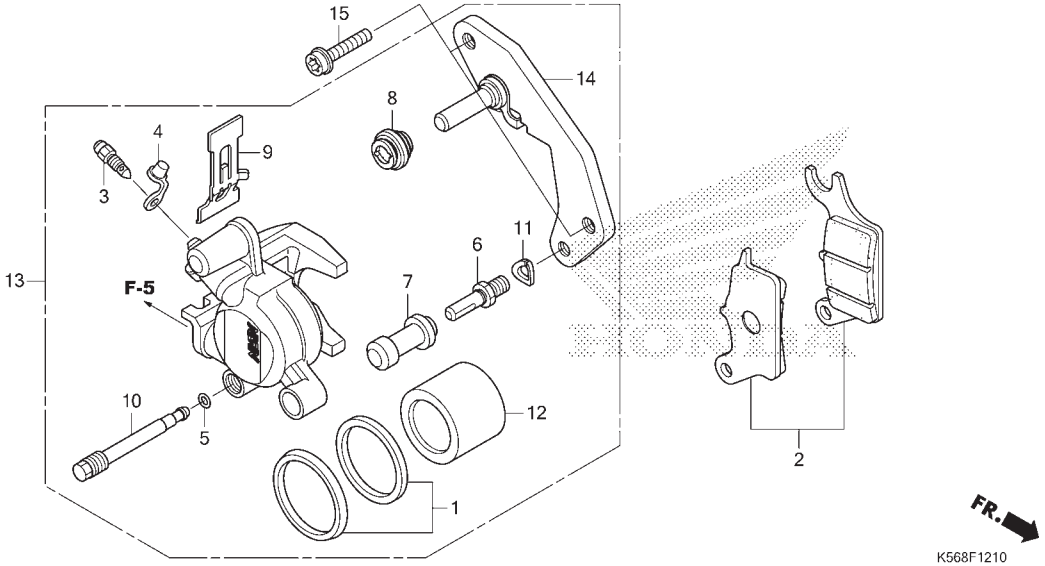

No. Ref.	L.O.N.	(Nomor ref. relatif) Deskripsi	F.R.T.
2	711115	SHOE(PAD) SET, BRAKE :FRONT....	0,1
12		(1)	
	7111D1	PISTON, FRONT BRAKE CALIPER....	0,4
		.TERMASUK: Pembuangan angin palsu	
13	711130	CALIPER, FRONT BRAKE.....	0,3
		.TERMASUK: Pembuangan angin palsu	
14	7111G0	BRACKET, FRONT CALIPER.....	0,1

No. Ref.	No. Part	Deskripsi	Jumlah SONIC 150R (FS150R) 2015(G)	No. Seri	Kode Parts Catalog
1	06451-961-405	SEAL SET, PISTON	1		
2	06455-K56-N01	PAD SET, FR. BRAKE	1		
3	43352-568-004	SCREW, BLEEDER	1		
4	43353-461-772	CAP, BLEEDER	1		
5	45111-MAJ-G42	RING, STOPPER	1		
6	45131-GZ0-007	BOLT, PIN	1		
7	45132-166-017	BOOT, PIN BUSH	1		
8	45133-MA3-007	BOOT B	1		
9	45208-KWB-601	SPRING, PAD	1		
10	45215-KPH-951	PIN, HANGER	1		
11	45216-166-007	WASHER, WAVE	1		
12	45218-KWB-601	PISTON	1		
13	45250-K56-N01	CALIPER SUB ASSY., R. FR.	1		
14	45290-K56-N01	BRACKET SUB ASSY., FR. CALIPER .	1		
15	90131-KPH-881	BOLT, TORX, 8X25	2		

F-14-40 FRONT WHEEL

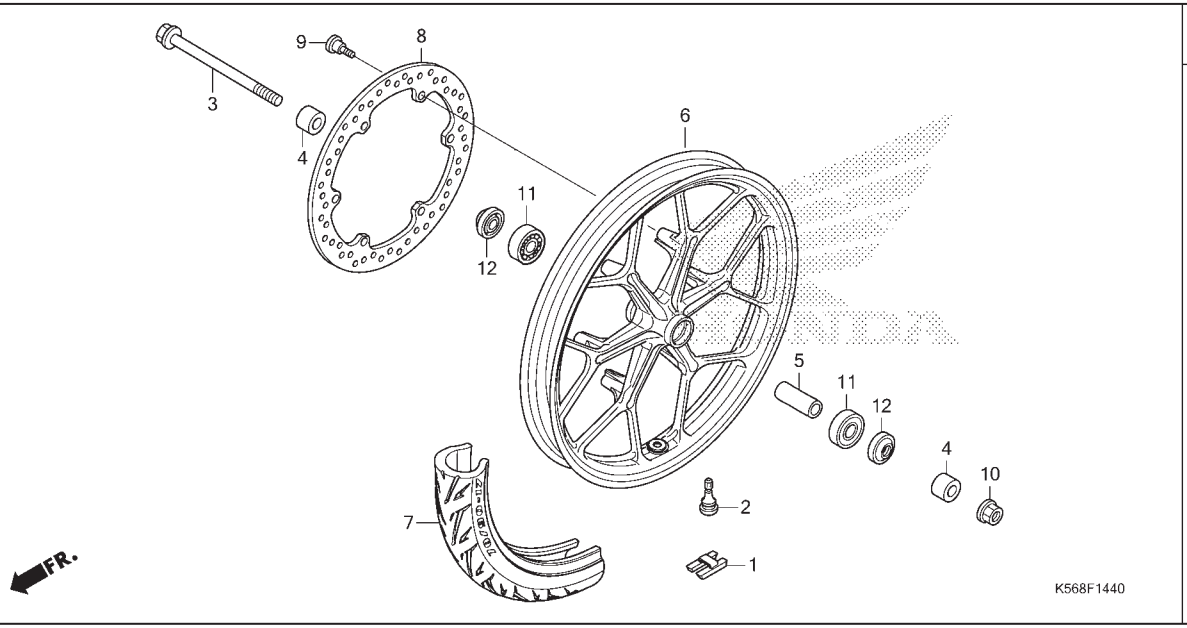

No. Ref.	L.O.N.	(Nomor ref. relatif) Deskripsi	F.R.T.
1	7101A6	WEIGHT, BALANCE :FRONT.....	0,5
3		(12)	
	710151	AXLE, FRONT WHEEL.....	0,2
6	7101D4	FRONT WHEEL.....	0,9
		.TERMASUK: Balancing	
		CATATAN: Termasuk No. Ref. 2,5,11,12	
7	710139	FRONT TIRE(SATU).....	0,8
		.TERMASUK: Balancing	
8	711120	DISC, FRONT BRAKE.....	0,3
11	710115	BEARING, FRONT WHEEL(SATU).....	0,4
	710115G	.Ganti 1 bearing tambahkan.....	0,1

No. Ref.	No. Part	Deskripsi	Jumlah SONIC 150R (FS150R) 2015(G)	No. Seri		Kode Parts Catalog
1	42704-MER-D00	WEIGHT, BALANCE(10G)	N			
	42705-MER-D00	WEIGHT, BALANCE(20G)	N			
	42706-MER-D00	WEIGHT, BALANCE(30G)	N			
2	42753-KWF-901	VALVE, RIM	1			
3	44301-K56-N00	AXLE, FR. WHEEL	1			
4	44311-K56-N00	COLLAR, FR. WHEEL SIDE	2			
5	44620-KPH-951	COLLAR, FR. AXLE DISTANCE	1			
6	44601-K56-N00ZA	WHEEL SUB ASSY., FR.				
		YR271 .....NITRIC ORANGE	1	.....	.....	REPSOL
	44601-K56-N00ZB	*NH303M* MAT AXIS GRAY METALLIC	1	.....	.....	STANDARD
7	44711-K56-N00	TIRE, FR. (70/90-17M/C 38P)	1			
8	45251-K56-N01	DISK, FR. BRAKE	1			
9	90105-KGH-901	BOLT, BRAKE DISK, 8X24	6			
10	90306-KGH-902	NUT, U, 12MM	1			
11	91052-K03-N41	BEARING, RADIAL BALL(6201U L) (SK)	2			
	91052-K24-902	BEARING, RADIAL BALL(6201U L) (NT)	2			
	91052-K24-903	BEARING, RADIAL BALL(6201U L) (FK)	2			
	91052-K24-904	BEARING, RADIAL BALL(6201U L) (FA)	2			
12	91251-KPH-901	DUST SEAL, 21X37X7	2			

F-15 REAR BRAKE MASTER CYLINDER

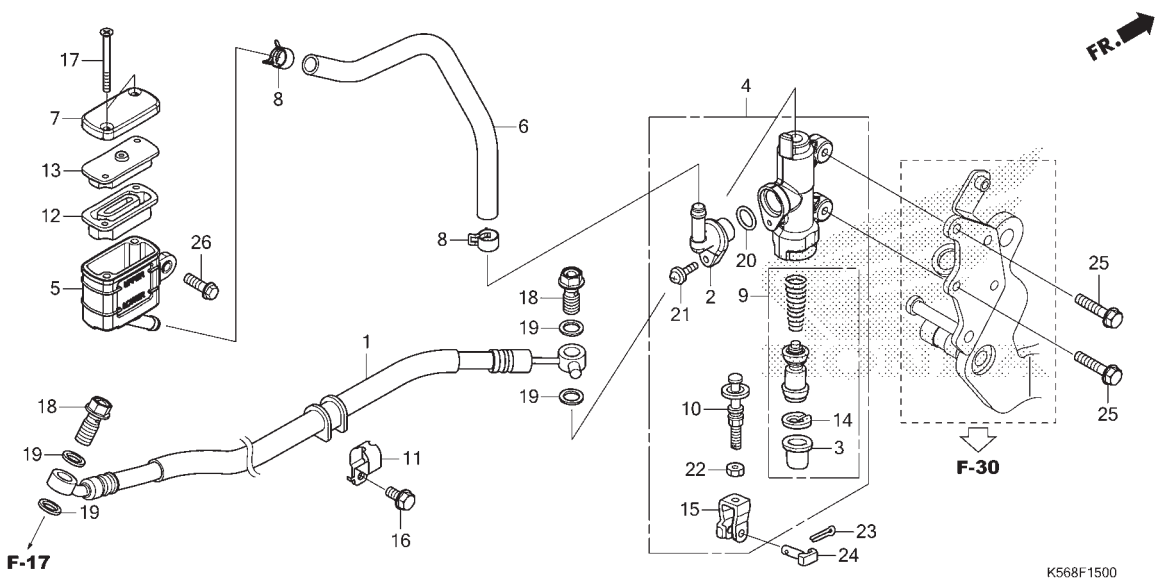

No. Ref.	L.O.N.	(Nomor ref. relatif) Deskripsi	F.R.T.
1	712130	HOSE, REAR BRAKE.....	0,4
		.TERMASUK: Pembuangan angin palsu	
4	712125	CYLINDER, REAR BRAKE MASTER....	0,4
		.TERMASUK: Pembuangan angin palsu	
5	7121F6	CUP, REAR MASTER CYLINDER OIL..	0,3
		.TERMASUK: Pembuangan angin palsu	
6	7121C2	HOSE, REAR MASTER CYLINDER OIL CUP.....	0,3
		.TERMASUK: Pembuangan angin palsu	
9	7121H0	PISTON SET, REAR BRAKE MASTER..	0,4
		.TERMASUK: Pembuangan angin palsu	
12	7121G7	DIAPHRAGM, REAR BRAKE MASTER CYLINDER.....	0,1

No. Ref.	No. Part	Deskripsi	Jumlah SONIC 150R (FS150R) 2015(G)	No. Seri	Kode Parts Catalog
1	43310-K56-N01	HOSE COMP., RR. BRAKE	1		
2	43503-MER-D01	CONNECTOR, MASTER CYLINDER	1		
3	43504-MB2-007	BOOT COMP.	1		
4	43510-K56-N01	CYLINDER SUB ASSY., RR. BRAKE MASTER	1		
5	43511-KW7-882	CUP COMP., OIL	1		
6	43512-K56-N01	HOSE COMP., RR. BRAKE MASTER ...	1		
7	43513-KBP-882	CAP, MASTER CYLINDER	1		
8	43514-KS6-702	CLAMP, MASTER CYLINDER OIL HOSE	2		
9	43520-MJ6-316	PISTON SET, MASTER CYLINDER	1		
10	43530-KV3-702	ROD COMP., PUSH	1		
11	45156-K20-900	CLAMPER A, BRAKE HOSE	1		
12	45520-GW0-912	DIAPHRAGM	1		
13	45521-GW0-913	PLATE, DIAPHRAGM	1		
14	46182-MEL-D21	CIRCLIP	1		
15	46504-KV6-703	JOINT, BRAKE ROD	1		
16	90103-MCS-G00	BOLT, FLANGE, 6X12	1		
17	90140-KZZ-901	SCREW, FLAT, 4X45	2		
18	90145-GAZ-981	BOLT, OIL, 10X22	2		
19	90545-300-000	WASHER, OIL BOLT	4		
20	91212-422-007	O-RING, 14.8X2.4	1		
21	93893-04012-17	SCREW-WASHER, 4X12	1		
22	94002-08000-0S	NUT, HEX., 8MM	1		

3

F-15 REAR BRAKE MASTER CYLINDER

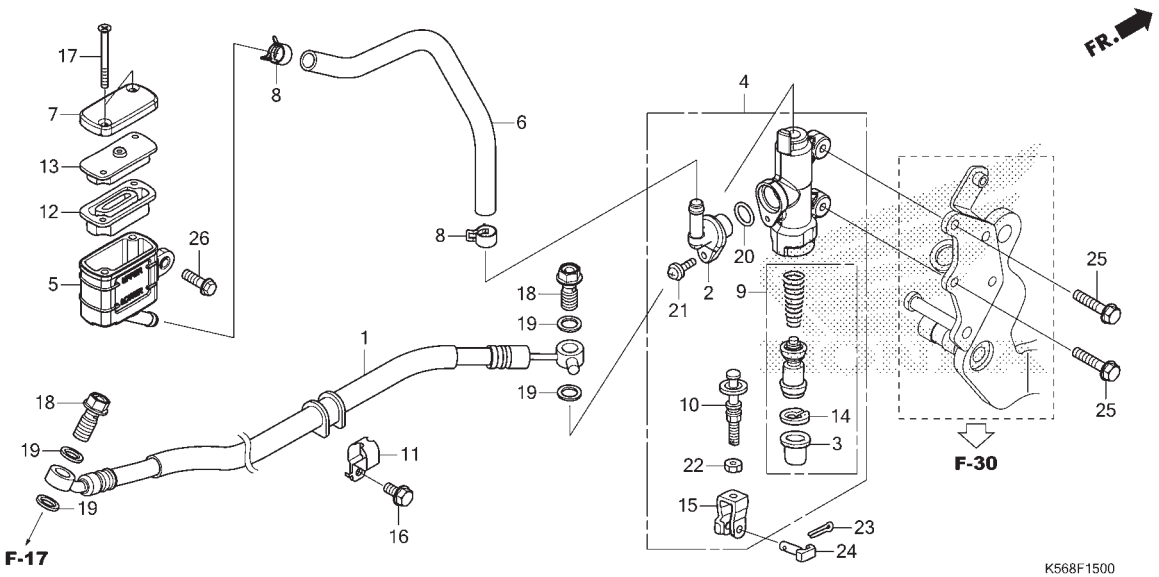

No. Ref.	No. Part	Deskripsi	Jumlah SONIC 150R (FS150R) 2015(G)	No. Seri	Kode Parts Catalog
23	94201-20150	PIN, SPLIT, 2.0X15	1		
24	95015-54002	PIN D, JOINT	1		
25	95701-06018-01	BOLT, FLANGE, 6X18	2		
26	96001-06014-00	BOLT, FLANGE, 6X14	1		

3

F-17 REAR BRAKE CALIPER

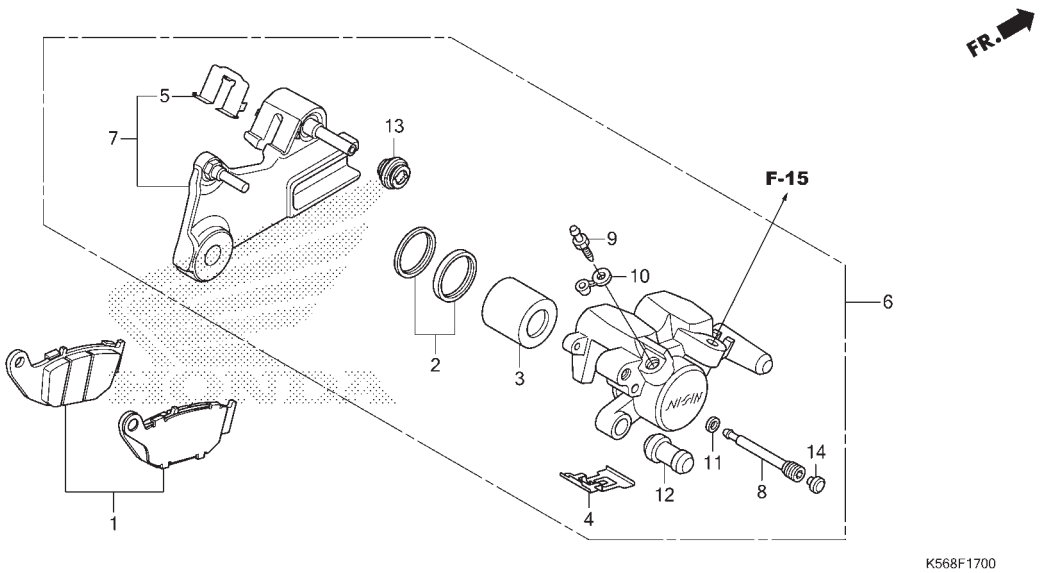

No. Ref.	L.O.N.	(Nomor ref. relatif) Deskripsi	F.R.T.
1	711140	SHOE(PAD) SET, BRAKE :REAR.....	0,1
3		(2)	
	7111D5	PISTON, REAR BRAKE CALIPER.....	0,6
		.TERMASUK: Pembuangan angin palsu	
6	711155	CALIPER, REAR BRAKE.....	0,5
		.TERMASUK: Pembuangan	
7	7111C1	BRACKET, REAR CALIPER.....	0,2

No. Ref.	No. Part	Deskripsi	Jumlah SONIC 150R (FS150R) 2015(G)	No. Seri	Kode Parts Catalog
1	06435-K56-N01	PAD SET, RR.	1		
2	06451-MA7-406	SEAL SET, PISTON	1		
3	43107-MA7-007	PISTON	1		
4	43108-KSP-B51	SPRING, PAD	1		
5	43112-KSP-B01	RETAINER	1		
6	43150-K56-N01	CALIPER SUB ASSY., RR.	1		
7	43190-K56-N01	BRACKET SUB ASSY., RR.	1		
8	43215-KGH-902	PIN, HANGER	1		
9	43352-568-004	SCREW, BLEEDER	1		
10	43353-461-772	CAP, BLEEDER	1		
11	45111-MAJ-G42	RING, STOPPER	1		
12	45132-166-017	BOOT, PIN BUSH	1		
13	45133-MA3-007	BOOT B	1		
14	45203-MCC-007	PLUG, PIN	1		

F-19-40 REAR WHEEL

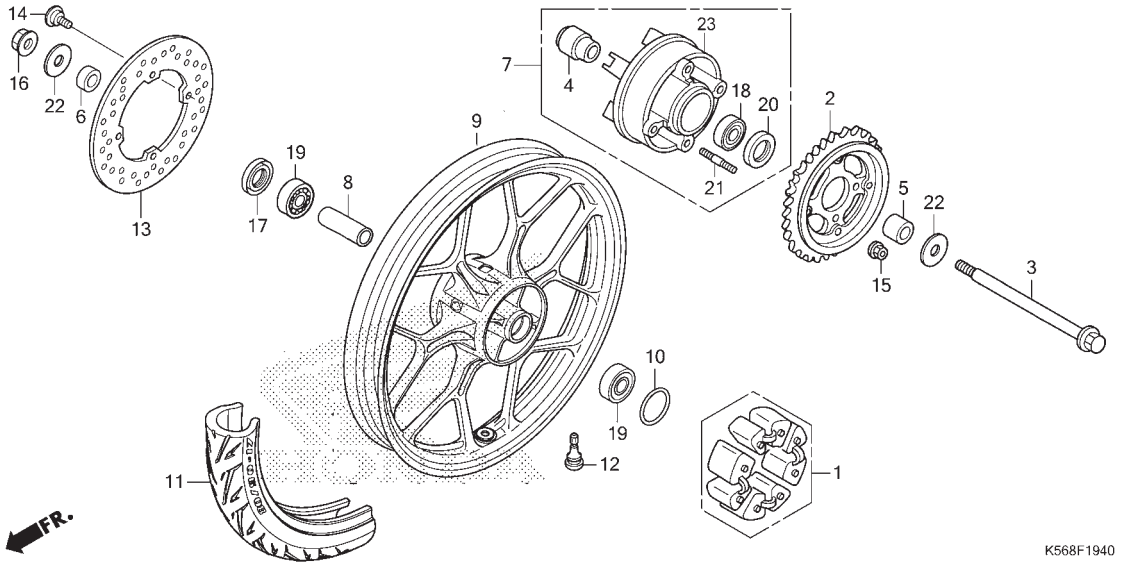

No. Ref.	L.O.N.	(Nomor ref. relatif) Deskripsi	F.R.T.
1		(10)	
	710157	DAMPER, REAR WHEEL.....	0,2
2	7101A0	SPROCKET, FINAL DRIVEN.....	0,3
3		(17,2)	
	710160	AXLE, REAR WHEEL.....	0,2
7	7101A5	FLANGE ASSY., FINAL DRIVEN.....	0,3
9	710118	REAR WHEEL.....	0,6
		Catatan: Termasuk No. Ref. 8,10,12,17,19	
11	710142	REAR TIRE(SATU).....	0,5
13	711145	DISC, REAR BRAKE.....	0,3
18	7101D1	BEARING, FINAL DRIVEN FLANGE...	0,4
19	710133	BEARING, REAR WHEEL(SATU).....	0,4
	710133G	.Ganti 1 bearing tambahkan.....	0,1

No. Ref.	No. Part	Deskripsi	Jumlah SONIC 150R (FS150R) 2015(G)	No. Seri	Kode Parts Catalog
1	41241-KW7-881	DAMPER, WHEEL	4		
2	41200-K56-N00	SPROCKET COMP., FINAL DRIVEN(42T)	1		
3	42301-K56-N00	AXLE, RR. WHEEL	1		
4	42303-KAN-T40	SLEEVE, RR. WHEEL	1		
5	42304-KPP-900	COLLAR, L. RR. WHEEL SIDE	1		
6	42313-KGH-901	COLLAR, RR. WHEEL SIDE	1		
7	42615-K56-N00	FLANGE SUB ASSY, DRIVEN	1		
8	42620-K56-N00	COLLAR, RR. AXLE DISTANCE	1		
9	42601-K59-N00ZA	WHEEL SUB ASSY., RR.			
		YR271 .....NITRIC ORANGE	1	....	REPSOL
	42601-K59-N00ZB	*NH303M* MAT AXIS GRAY METALLIC	1	....	STANDARD
10	42653-001-004	O-RING, 40.5X3	1		
11	42711-K56-N00	TIRE, RR. (80/90-17M/C 50P)	1		
12	42753-KWF-901	VALVE, RIM	1		
13	43351-K56-N01	DISK, RR. BRAKE	1		
14	90105-KGH-901	BOLT, BRAKE DISK, 8X24	4		
15	90304-KGH-901	NUT, U, 10MM	4		
16	90306-KGH-901	NUT, U, 12MM	1		
17	90753-051-003	OIL SEAL, 26X37X6(AR)	1		
	90753-051-005	OIL SEAL, 26X37X6(NO)	1		
18	91051-K35-V01	BEARING, RADIAL BALL, 6203UU (NK)	1		
19	91053-K03-H02	BEARING, RADIAL BALL(6301U L) (FA)	2		

F-19-40 REAR WHEEL

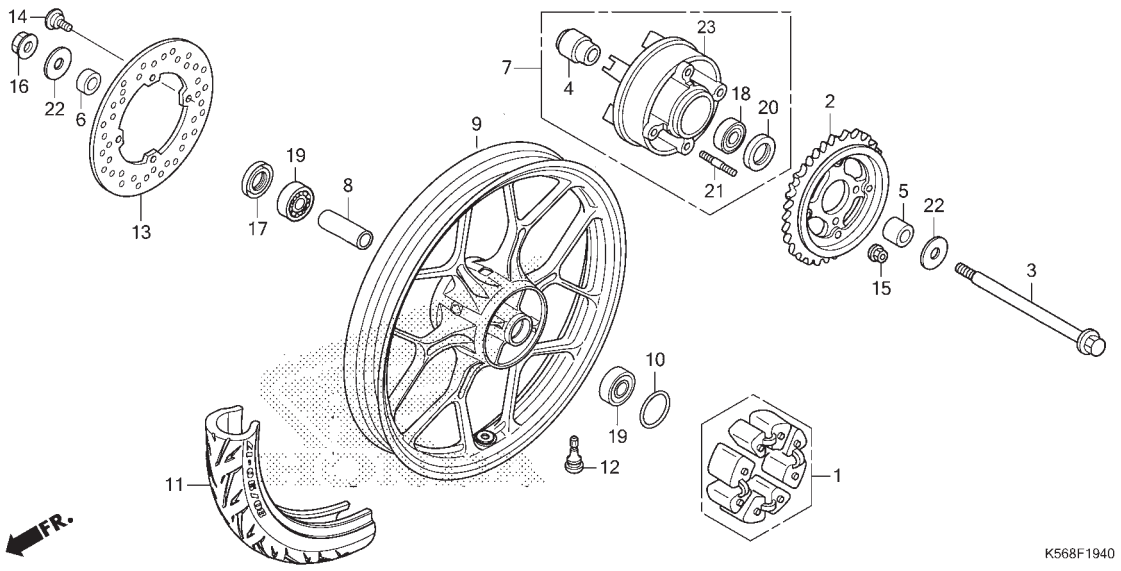

No. Ref.	No. Part	Deskripsi	Jumlah SONIC 150R (FS150R) 2015(G)	No. Seri	Kode Parts Catalog
(19)	91053-K03-N41	BEARING, RADIAL BALL(6301U L) (SK)	2		
20	91251-KGH-902	DUST SEAL, 27X40X4.5(NO)	1		
	91251-KPH-881	DUST SEAL, 27X40X4.5(AR)	1		
21	92915-10028-0E	BOLT, STUD, 10X28	4		
22	94103-12000	WASHER, PLAIN, 12MM	2		
23	42611-K56-N00	FLANGE, FINAL DRIVEN	1		

F-21 FUEL TANK

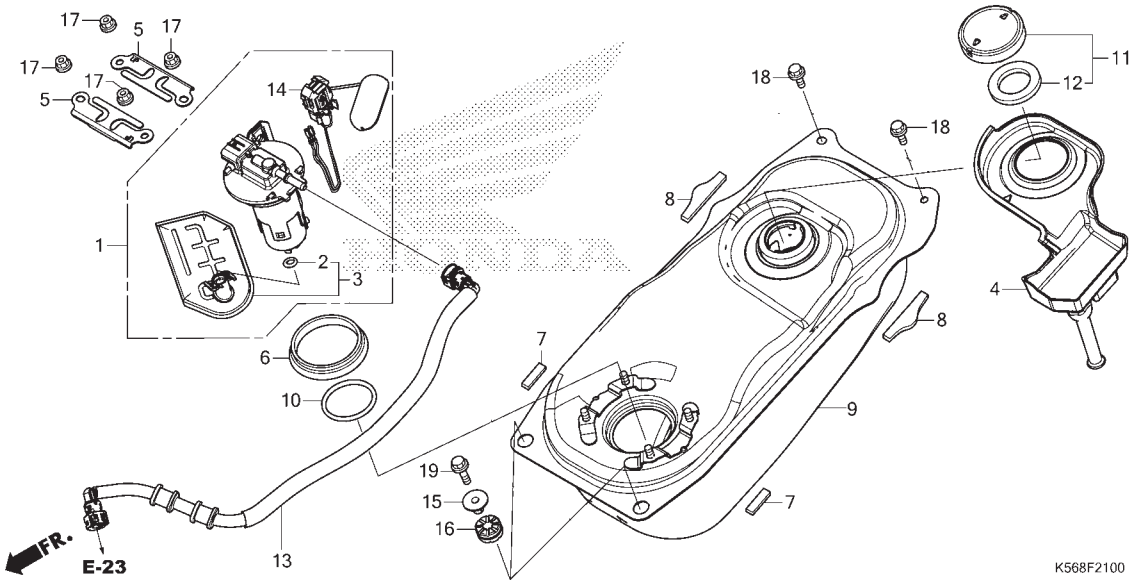

No. Ref.	L.O.N.	(Nomor ref. relatif) Deskripsi	F.R.T.
1		(6,1)	
	310120	PUMP ASSY., FUEL.....	0,7
3		(2)	
	3101C7	FILTER, FUEL.....	0,6
9	310100	TANK, FUEL.....	0,7
		CATATAN:Termasuk No. Ref.7,8	
13	310162	HOSE, FUEL FEED.....	0,6
14	617105	FUEL TANK SENDING UNIT.....	0,8

No. Ref.	No. Part	Deskripsi	Jumlah SONIC 150R (FS150R) 2015(G)	No. Seri	Kode Parts Catalog
1	16700-K56-N01	PUMP ASSY., FUEL	1		
2	16706-KVB-S51	O-RING(P7)	1		
3	16707-K56-N01	FILTER SET	1		
4	17505-K56-N00	TRAY, FUEL	1		
5	17517-GGL-J00	RETAINER, FUEL PUMP	2		
6	17518-GGL-J00	DUST SEAL	1		
7	17518-K56-N00	RUBBER, CUSHION	2		
8	17519-K56-N00	RUBBER, FUEL TANK CUSHION	2		
9	17510-K56-N00	TANK COMP., FUEL	1		
10	17572-GGL-J00	O-RING, FUEL PUMP	1		
11	17620-KGH-600	CAP, FUEL FILLER	1		
12	17631-KEV-900	PACKING, FUEL FILLER CAP	1		
13	17650-K56-N01	HOSE COMP., FUEL FEED	1		
14	37800-K56-N01	FUEL UNIT	1		
15	61104-428-000	COLLAR, FR. FENDER	2		
16	84703-425-001	RUBBER, TAILLIGHT MOUNTING	2		
17	94050-0600	NUT, FLANGE, 6MM	4		
18	95701-06012-00	BOLT, FLANGE, 6X12	2		
19	95701-06022-01	BOLT, FLANGE, 6X22	2		

F-23 SEAT

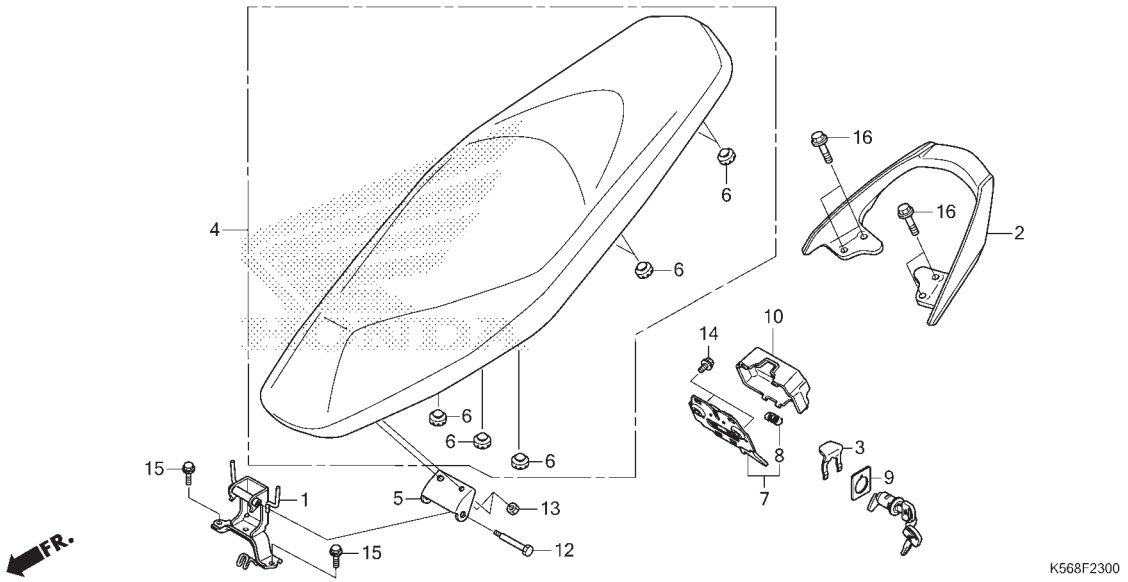

No. Ref.	L.O.N.	(Nomor ref. relatif) Deskripsi	F.R.T.
1		(5)	
	4131P0	HINGE, SEAT.....	0,4
2	4131F6	RAIL, GRAB :REAR.....	0,1
4	4131E4	SEAT :DOUBLE.....	0,1
7	4131E8	CATCH, SEAT :SIDE BELAKANG.....	0,1

No. Ref.	No. Part	Deskripsi	Jumlah SONIC 150R (FS150R) 2015(G)	No. Seri		Kode Parts Catalog
1	50193-K56-N00	STAY, SEAT HINGE	1			
2	50400-K56-N00ZA	GRIP, RR.				
		NH303M MAT AXIS GRAY METALLIC	1	.....	.....	REPSOL
	50400-K56-N00ZB	*NH255M* SHIMMER SILVER METALLIC	1	.....	.....	STANDARD
3	75581-GN8-920	SPRING, LOCK KEY SETTING	1			
4	77200-K56-N00	SEAT COMP., DOUBLE	1			
5	77210-K56-N00	HINGE, SEAT	1			
6	77215-KW7-901	RUBBER C, SEAT SETTING	7			
7	77230-K56-N00	CATCH COMP., SEAT	1			
8	77234-K35-V00	SPRING, SEAT LOCK	1			
9	77236-GW0-000	WASHER, SEAT LOCK	1			
10	77237-K56-N00	COVER, SEAT CATCH	1			
12	90105-KPH-901	BOLT, SEAT HINGE	1			
13	94001-06070-0S	NUT, HEX., 6MM	2			
14	95701-06010-00	BOLT, FLANGE, 6X10	2			
15	95701-06012-00	BOLT, FLANGE, 6X12	2			
16	95701-08022-00	BOLT, FLANGE, 8X22	4			

F-23-10 BODY COVER

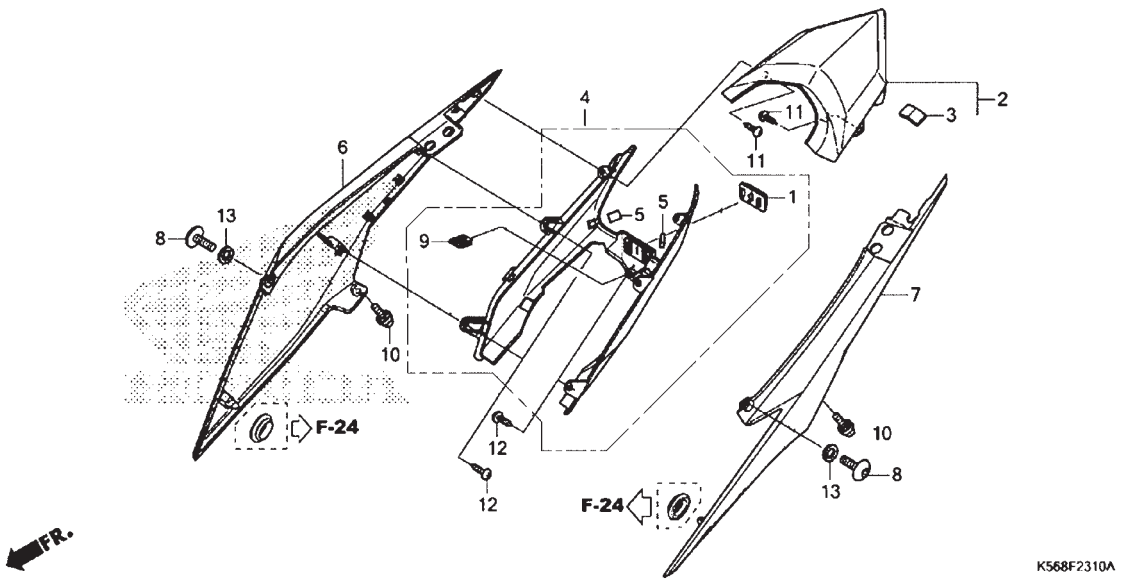

No. Ref.	L.O.N.	(Nomor ref. relatif) Deskripsi	F.R.T.
2	6161G8	COVER, TAILLIGHT.....	0,2
4	6161AD	COVER, TAILLIGHT :UNDER.....	0,2
		CATATAN: Tidak termasuk No.Ref. 1,5,9	
6	4131J0	COVER, BODY :RIGHT.....	0,2
7	4131H9	COVER, BODY :LEFT.....	0,2
	4131J1	COVER, BODY :KEDUA-DUANYA.....	0,2

No. Ref.	No. Part	Deskripsi	Jumlah SONIC 150R (FS150R) 2015(G)	No. Seri		Kode Parts Catalog
1	33741-KAN-961	REFLECTOR, RR. REFLEX	1			
2	64600-K56-N00	COVER, COMBINATION LIGHT UPPER .	1			
3	64601-K56-N00	RUBBER, TAILLIGHT CUSHION (UPPER)	1			
4	6470A-K56-N00	COVER, COMBINATION LIGHT LOWER (WL)	1			
5	64751-K56-N00	RUBBER, CUSHION COMBINATION LIGHT	2			
6	83610-K56-N00RSW	COVER, R. BODY(WL)				
		NH196 .....ROSS WHITE	1	.....	.....	REPSOL
	83610-K56-N00SMM	*RP195* .SPACE MAGENTA METALLIC	1	.....	.....	STANDARD
	83610-K56-N00WRD	*R258* .....WINNING RED	1	.....	.....	STANDARD
	83610-K56-N00FMB	*NH1* .....BLACK	1	.....	.....	STANDARD
7	83620-K56-N00RSW	COVER, L. BODY(WL)				
		NH196 .....ROSS WHITE	1	.....	.....	REPSOL,STANDARD
	83620-K56-N00SMM	*RP195* .SPACE MAGENTA METALLIC	1	.....	.....	STANDARD
	83620-K56-N00WRD	*R258* .....WINNING RED	1	.....	.....	STANDARD
	83620-K56-N00FMB	*NH1* .....BLACK	1	.....	.....	STANDARD
8	90134-K33-D00	SCREW, PAN, 6X12	2			
9	90677-KAN-T00	NUT, CLIP, 5MM	1			
10	91509-GE2-760	SCREW, PAN, 5X11.5	2			
11	93913-24220	SCREW, TAPPING, 4X12	2			
12	93903-25210	SCREW, TAPPING, 5X12	4			
13	90514-K45-N00	WASHER, RUBBER (6MM)	2			

F-24 SIDE COVER

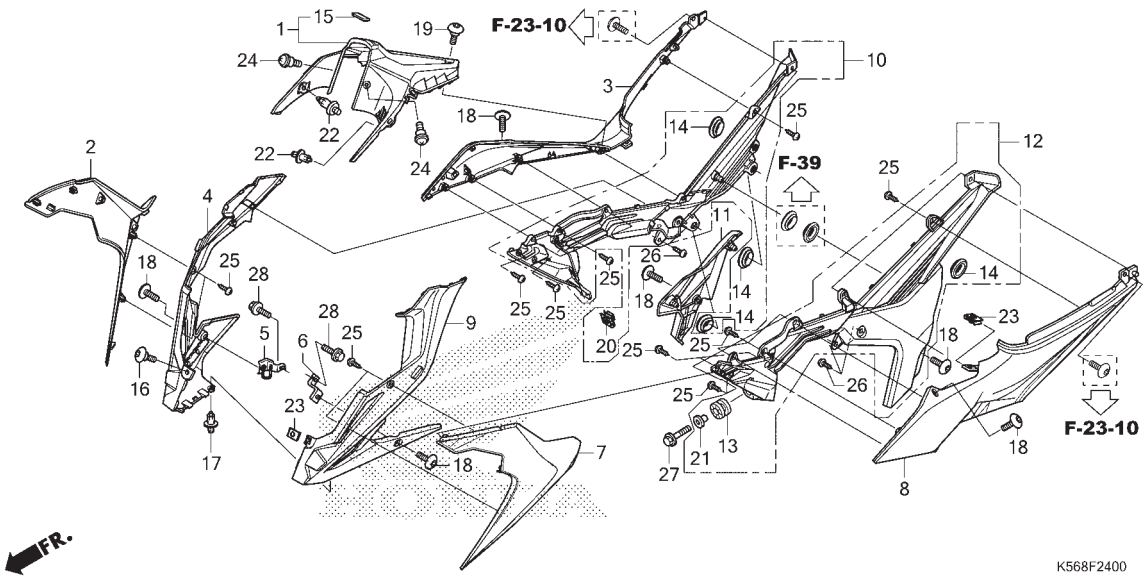

No. Ref.	L.O.N.	(Nomor ref. relatif) Deskripsi	F.R.T.
1	4131V7	COVER, HEAD PIPE.....	0,1
2	4111D1	COWL, SIDE :RIGHT.....	0,6
3	4111E8	PANEL, SIDE :RIGHT.....	0,5
4	4111D7	COWL, LOWER :RIGHT.....	0,6
7	4111D0	COWL, SIDE :LEFT.....	0,6
	4111D2	COWL, SIDE :KEDUA-DUANYA.....	0,7
8	4111E7	PANEL, SIDE :LEFT.....	0,5
	4111AP	PANEL, SIDE :KEDUA-DUANYA.....	0,6
9	4111D6	COWL, LOWER :LEFT.....	0,6
	4111H1	COWL, LOWER :KEDUA-DUANYA.....	0,7
10	4111H9	COVER, SIDE :RIGHT.....	0,5
		CATATAN: Tidak termasuk No. Ref. 14,20	
11	6101A1	COVER, BATTERY.....	0,1
12	4111H8	COVER, SIDE :LEFT.....	0,5
	4111J0	COVER, SIDE :KEDUA-DUANYA.....	0,6
		CATATAN: Tidak termasuk No. Ref. 13,14,21	

No. Ref.	No. Part	Deskripsi	Jumlah SONIC 150R (FS150R) 2015(G)	No. Seri		Kode Parts Catalog
1	6410A-K56-N00	SET ILLUST, COVER HEAD PIPE	1			
2	64320-K56-N00RSW	COWL, R. SIDE LOWER(WL)				
		NH196 .....ROSS WHITE	1	.....	.....	REPSOL,STANDARD
	64320-K56-N00FMB	*NH1* .....BLACK	1	.....	.....	STANDARD
3	64340-K56-N00NOR	COVER, R. SIDE UPPER(WL)				
		YR271 .....NITRIC ORANGE	1	.....	.....	REPSOL
	64340-K56-N00SMM	*RP195* .SPACE MAGENTA METALLIC	1	.....	.....	STANDARD
	64340-K56-N00WRD	*R258* .....WINNING RED	1	.....	.....	STANDARD
	64340-K56-N00RSW	*NH196* .....ROSS WHITE	1	.....	.....	STANDARD
	64340-K56-N00FMB	*NH1* .....BLACK	1	.....	.....	STANDARD
4	64330-K56-N00	COVER, R. UNDER	1			
5	64341-K56-N00	STAY, R. UNDER COVER	1			
6	64342-K56-N00	STAY, L. UNDER COVER	1			
7	64420-K56-N00RSW	COWL, L. SIDE LOWER(WL)				
		NH196 .....ROSS WHITE	1	.....	.....	REPSOL,STANDARD
	64420-K56-N00FMB	*NH1* .....BLACK	1	.....	.....	STANDARD
8	64440-K56-N00NOR	COVER, L. SIDE UPPER(WL)				
		YR271 .....NITRIC ORANGE	1	.....	.....	REPSOL,STANDARD
	64440-K56-N00SMM	*RP195* .SPACE MAGENTA METALLIC	1	.....	.....	STANDARD
	64440-K56-N00WRD	*R258* .....WINNING RED	1	.....	.....	STANDARD
	64440-K56-N00RSW	*NH196* .....ROSS WHITE	1	.....	.....	STANDARD
	64440-K56-N00FMB	*NH1* .....BLACK	1	.....	.....	STANDARD
9	64430-K56-N00	COVER, L. UNDER	1			
10	6450A-K56-N00	COVER ASSY., R. SIDE	1			
11	6452A-K56-N00	COVER, BATTERY SET	1			
12	6455A-K56-N00	COVER ASSY., L. SIDE	1			

F-24 SIDE COVER

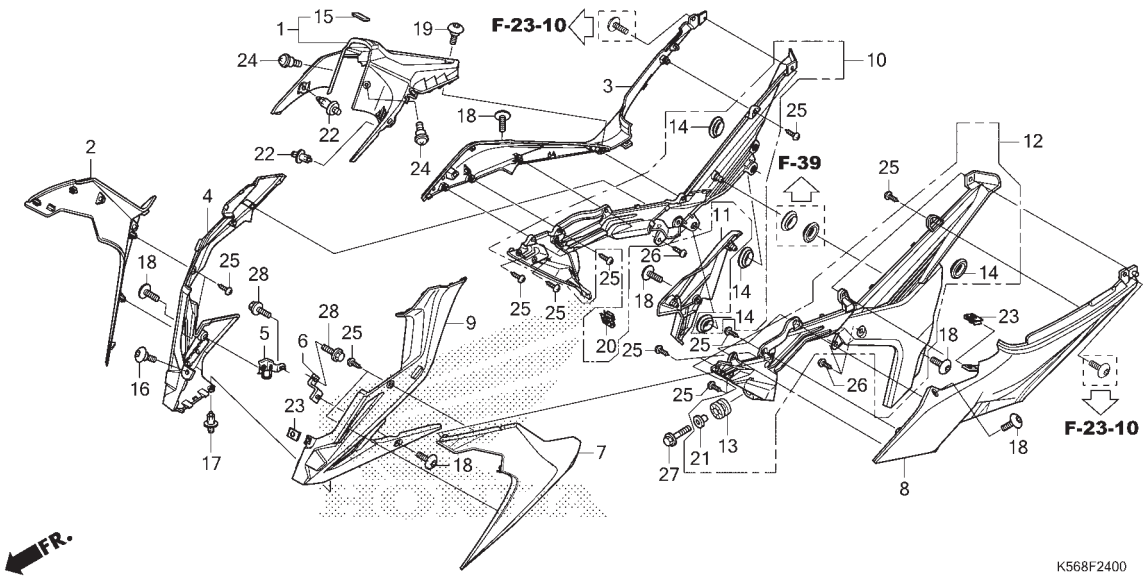

No. Ref.	No. Part	Deskripsi	Jumlah SONIC 150R (FS150R) 2015(G)	No. Seri	Kode Parts Catalog
13	64615-KR1-860	RUBBER, LOWER COWL MOUNTING	1		
14	83551-GE2-000	GROMMET, AIR CLEANER CASE	4		
15	86150-KYS-940	EMBLEM, PRODUCT	1		
16	90114-KPH-700	SCREW, SPECIAL, 5X11	1		
17	90116-SP0-004	CLIP, BUMPER SEAL	1		
18	90132-KPP-T01	SCREW, PAN, 6X10	6		
19	90134-KPP-T01	SCREW, PAN, 5X14	1		
20	90305-GK8-000	NUT, CLIP, 6MM	1		
21	90501-GR2-000	COLLAR, 6.2X11	1		
22	90601-PV3-004	CLIP, AIR INTAKE DUCT PUSH	2		
23	90677-KAN-T00	NUT, CLIP, 5MM	2		
24	91509-GE2-760	SCREW, PAN, 5X11.5	2		
25	93903-24310	SCREW, TAPPING, 4X12	22		
26	93903-25210	SCREW, TAPPING, 5X12	4		
27	95701-06022-01	BOLT, FLANGE, 6X22	1		
28	96001-06012-01	BOLT, FLANGE, 6X12	2		

F-25 AIR CLEANER

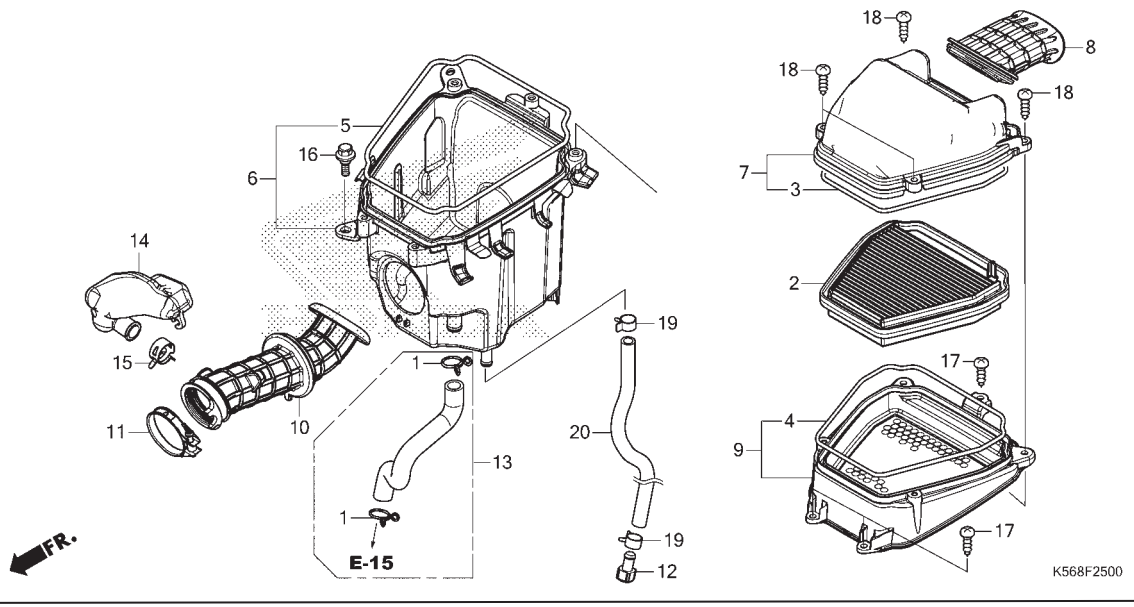

No. Ref.	L.O.N.	(Nomor ref. relatif) Deskripsi	F.R.T.
2		(3,4)	
	312105	ELEMENT, AIR CLEANER.....	0,4
6	3121A5	CASE, AIR CLEANER.....	0,8
7		(8)	
	312102	COVER, AIR CLEANER CASE.....	0,4
9		(5)	
	3121A8	BASE, AIR CLEANER ELEMENT.....	0,5
10	3121B6	TUBE, AIR CLEANER CONNECTING...	0,8
14	3121C1	RESONATOR.....	0,7

No. Ref.	No. Part	Deskripsi	Jumlah SONIC 150R (FS150R) 2015(G)	No. Seri	Kode Parts Catalog
1	15772-MN1-670	CLIP B, BREATHER TUBE	2		
2	17210-K56-N00	ELEMENT COMP., AIR CLEANER	1		
3	17213-K56-N00	SEAL, ELEMENT	1		
4	17213-K56-N00	SEAL, ELEMENT	1		
5	17214-K56-N00	SEAL, AIR CLEANER CASE	1		
6	17225-K56-N00	CASE SUB ASSY., AIR CLEANER	1		
7	17235-K56-N00	COVER SUB ASSY., AIR CLEANER ...	1		
8	17240-K56-N00	DUCT, INLET	1		
9	17245-K56-N00	HOLDER SUB ASSY., ELEMENT	1		
10	17253-K56-N00	TUBE, AIR CLEANER CONNECTING ...	1		
11	17256-K56-N00	BAND, AIR CLEANER CONNECTING TUBE (42)	1		
12	17370-419-701	PLUG, BREATHER TUBE	1		
13	1737A-K56-N00	TUBE ASSY., BREATHER	1		
14	17410-K56-N00	RESONATOR	1		
15	19509-KPH-900	CLAMP, TUBE(D19)	1		
16	90116-KVB-900	BOLT, FLANGE, 6MM	1		
17	93903-25480	SCREW, TAPPING, 5X20	3		
18	93903-25581	SCREW, TAPPING, 5X25	4		
19	95002-41200-08	CLAMP, TUBE(D12)	2		
20	95003-23030-31	TUBE, VINYL, 8X12X300	1		

F-27 EXHAUST MUFFLER

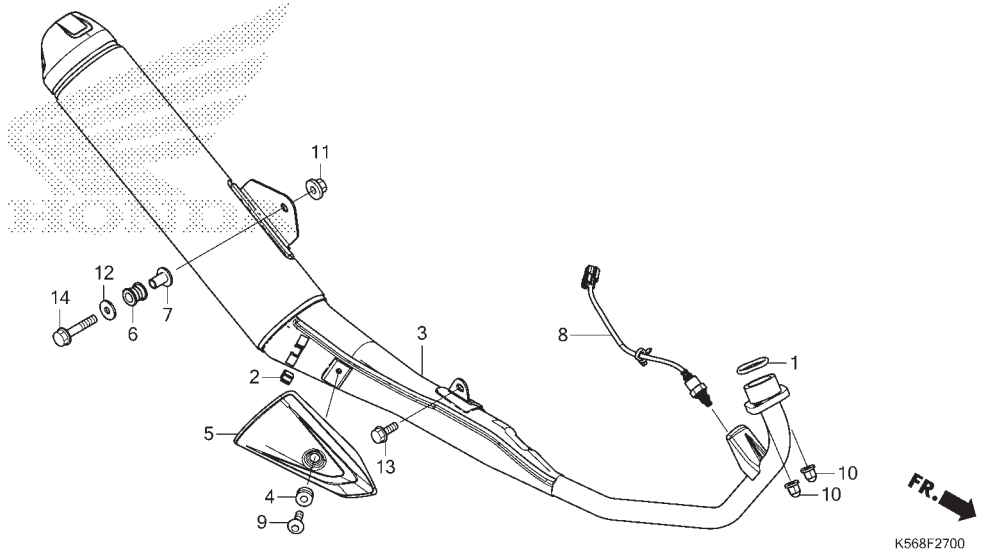

No. Ref.	L.O.N.	(Nomor ref. relatif) Deskripsi	F.R.T.
1	3131B4	GASKET, EXHAUST PIPE.....	0,2
3	313120	MUFFLER.....	0,3
5	313121	PROTECTOR, MUFFLER.....	0,1
8	617121	SENSOR, OXYGEN.....	0,3

No. Ref.	No. Part	Deskripsi	Jumlah SONIC 150R (FS150R) 2015(G)	No. Seri	Kode Parts Catalog
1	18291-MN5-651	GASKET, EX. PIPE	1		
2	18293-MCA-A20	RUBBER, PROTECTOR PACKING	1		
3	18300-K56-N00	MUFFLER COMP., EX.	1		
4	18345-MBT-610	RUBBER, PROTECTOR MOUNTING	1		
5	18356-K56-N00	PROTECTOR, MUFFLER	1		
6	18421-KE8-001	RUBBER, MUFFLER MOUNTING	1		
7	18422-KGC-901	COLLAR, MUFFLER MOUNTING	1		
8	36532-K56-N01	SENSOR, OXYGEN	1		
9	90113-KYJ-710	SCREW, PAN, 6X12	1		
10	90304-KPH-701	NUT, HEX. CAP, 8MM	2		
11	94050-08000	NUT, FLANGE, 8MM	1		
12	94103-08000	WASHER, PLAIN, 8MM	1		
13	95701-08016-01	BOLT, FLANGE, 8X16	1		
14	95701-08040-01	BOLT, FLANGE, 8X40	1		

F-29 PEDAL

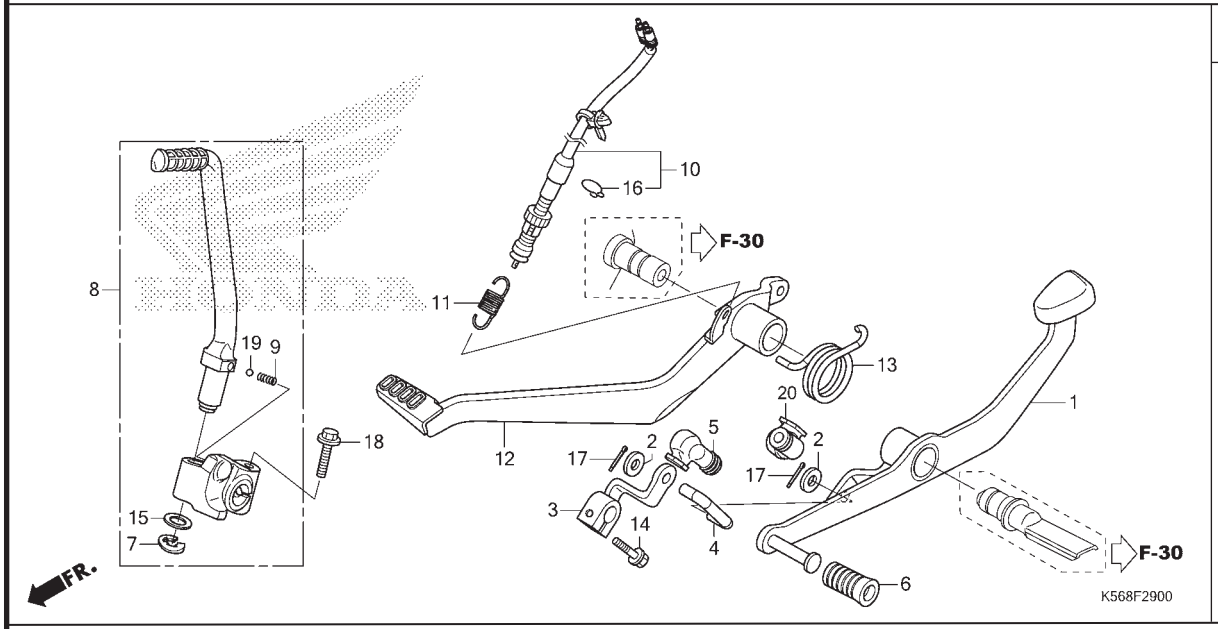

No. Ref.	L.O.N.	(Nomor ref. relatif) Deskripsi	F.R.T.
1	4101A1	PEDAL, GEAR CHANGE	0,2
3	4101A2	ARM, GEAR CHANGE	0,2
4	5101B5	ROD, CHANGE	0,2
8	112107	ARM, KICK STARTER	0,1
10	6151B5	SWITCH, REAR STOP :SISI PEDAL	0,7
12	810160	PEDAL, REAR BRAKE	0,2

No. Ref.	No. Part	Deskripsi	Jumlah SONIC 150R (FS150R) 2015(G)	No. Seri	Kode Parts Catalog
1	24701-K56-N00	PEDAL, GEAR CHANGE	1		
2	24703-KW6-840	WASHER, NYLON, 7MM	2		
3	24711-K56-N00	ARM COMP., GEAR CHANGE	1		
4	24720-K56-N00	ROD, TIE	1		
5	24721-K56-N00	COVER, CHANGE PEDAL	1		
6	24781-KRM-860	RUBBER, GEAR CHANGE PEDAL	1		
7	28293-333-000	CLIP, KICK STARTER ARM	1		
8	28300-K56-N00	ARM ASSY., KICK STARTER	1		
9	28333-KK0-000	SPRING, KICK STARTER	1		
10	35350-K56-N01	SWITCH ASSY., RR. STOP	1		
11	35357-KY1-000	SPRING, STOP SWITCH	1		
12	46500-K56-N00	PEDAL COMP., RR. BRAKE	1		
13	46514-K56-N00	SPRING, BRAKE PEDAL	1		
14	90102-MN1-670	BOLT, FLANGE, 6X20	1		
15	90505-KRM-860	WASHER, 15.5X22	1		
16	90601-KAF-004	CLIP, SWITCH COVER	1		
17	94201-20121	PIN, SPLIT, 2.0X12	2		
18	95701-08035-07	BOLT, FLANGE, 8X35	1		
19	96211-08000	BALL, STEEL, #8(1/4)	1		
20	24722-K56-N00	COVER B, CHANGE PEDAL	1		

F-30 STEP

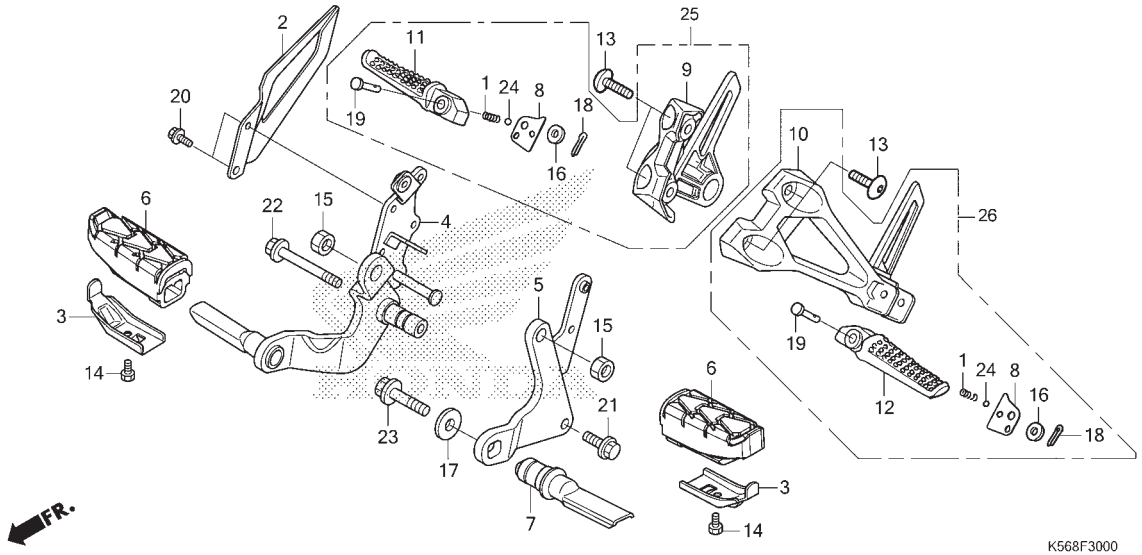

No. Ref.	L.O.N.	(Nomor ref. relatif) Deskripsi	F.R.T.
2	4101A0	GUARD, STEP.....	0,1
4	4101N2	HOLDER, STEP :RIGHT.....	0,2
5	4101N1	HOLDER, STEP :LEFT.....	0,1
	4101N6	HOLDER, STEP :KEDUA-DUANYA.....	0,2
6	4101D3	RUBBER, STEP :LEFT.....	0,1
	4101D4	RUBBER, STEP :RIGHT.....	0,1
	4101L8	RUBBER, STEP :KEDUA-DUANYA.....	0,1
7	4101C5	BAR, MAIN STEP :LEFT.....	0,1
9	4101D0	BRACKET, PILLION STEP :RIGHT...	0,1
10	4101C9	BRACKET, PILLION STEP :LEFT....	0,1
	4101K4	BRACKET, PILLION STEP : KEDUA-DUANYA.....	0,2
11	4101C8	BAR, PILLION STEP :RIGHT.....	0,1
12	4101C7	BAR, PILLION STEP :LEFT.....	0,1
	4101P4	BAR, PILLION STEP :KEDUA-DUANYA	0,2

No. Ref.	No. Part	Deskripsi	Jumlah SONIC 150R (FS150R) 2015(G)	No. Seri	Kode Parts Catalog
1	28333-300-000	SPRING, KICK STARTER STOPPER ...	2		
2	50606-K56-N00	GUARD, R. HEEL	1		
3	50619-K56-N00	PLATE, STEP LOWER	2		
4	50650-K56-N00	HOLDER, R. MAIN STEP	1		
5	50660-K56-N00	HOLDER, L. MAIN STEP	1		
6	50661-KYE-900	RUBBER, MAIN STEP	2		
7	50670-K56-N00	STEP COMP., CHANGE	1		
8	50711-K15-900	PLATE, PILLION STEP CLICK	2		
9	50715-K56-N00	HOLDER, R. PILLION STEP	1		
10	50716-K56-N00	HOLDER, L. PILLION STEP	1		
11	50720-KT7-761	BAR, R. PILLION STEP	1		
12	50730-KT7-761	BAR, L. PILLION STEP	1		
13	90128-KET-900	BOLT, SOCKET, 8X22	4		
14	92101-06012-07	BOLT, HEX., 6X12	2		
15	94002-12000-0S	NUT, HEX., 12MM	2		
16	94101-06000	WASHER, PLAIN, 6MM	2		
17	94103-10001	WASHER, PLAIN, 10MM	1		
18	94201-16150	PIN, SPLIT, 1.6X15	2		
19	95015-83000	PIN C, PILLION STEP	2		
20	95701-06010-00	BOLT, FLANGE, 6X10	2		
21	95701-08020-01	BOLT, FLANGE, 8X20	1		
22	95701-08065-00	BOLT, FLANGE, 8X65	1		
23	95701-10030-00	BOLT, FLANGE, 10X30	1		
24	96211-08000	BALL, STEEL, #8(1/4)	2		

F-30 STEP

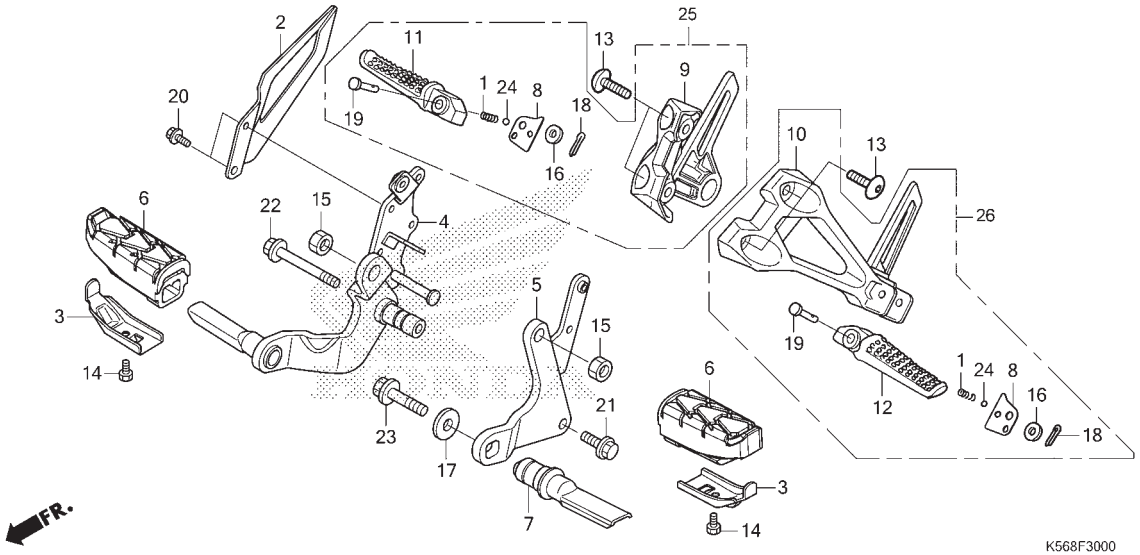

No. Ref.	No. Part	Deskripsi	Jumlah SONIC 150R (FS150R) 2015(G)	No. Seri	Kode Parts Catalog
25	50700-K56-N00	STEP ASSY., R. PILLION	1		
26	50705-K56-N00	STEP ASSY., L. PILLION	1		

3

F-31 STAND

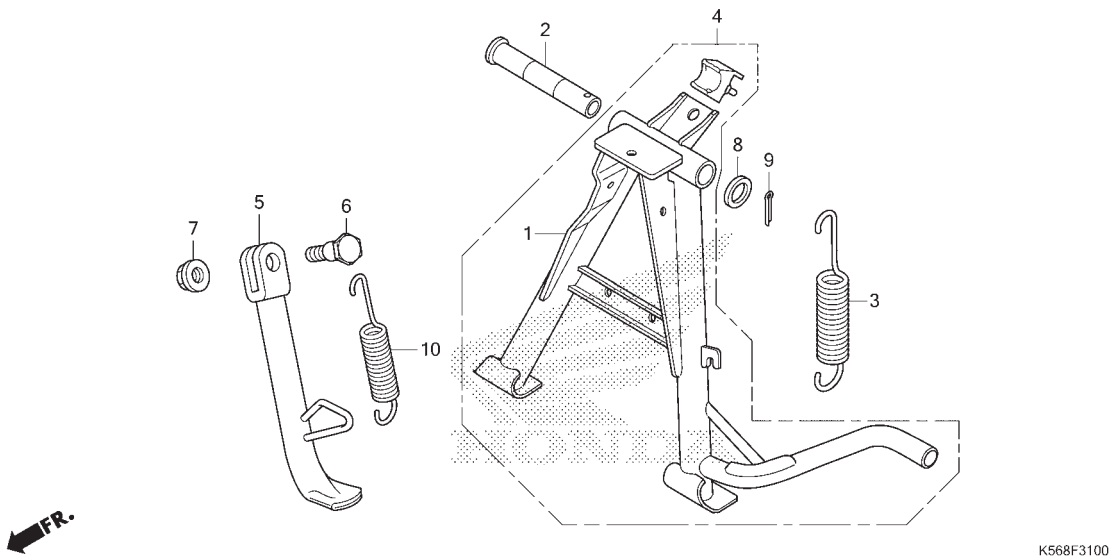

No. Ref.	L.O.N.	(Nomor ref. relatif) Deskripsi	F.R.T.
1		(2)	
	410175	STAND, MAIN.....	0,5
3	410176	SPRING, MAIN STAND.....	0,2
5	410180	BAR, SIDE STAND.....	0,2
10	410182	SPRING, SIDE STAND.....	0,1

No. Ref.	No. Part	Deskripsi	Jumlah SONIC 150R (FS150R) 2015(G)	No. Seri	Kode Parts Catalog
1	5050A-K56-N00	STAND ASSY., COMP., MAIN	1		
2	50512-KAN-961	PIPE, MAIN STAND PIVOT	1		
3	50522-KM3-000	SPRING, MAIN STAND	1		
4	50524-KBP-901	RUBBER, STAND STOPPER	1		
5	50530-K56-N00	BAR COMP., SIDE STAND	1		
6	90107-GN1-010	SCREW, SIDE STAND PIVOT	1		
7	90304-KGH-901	NUT, U, 10MM	1		
8	90521-028-000	WASHER, 17X22	1		
9	94201-30251	PIN, SPLIT, 3.0X25	1		
10	95014-72302	SPRING C, SIDE STAND	1		

F-32 SWINGARM

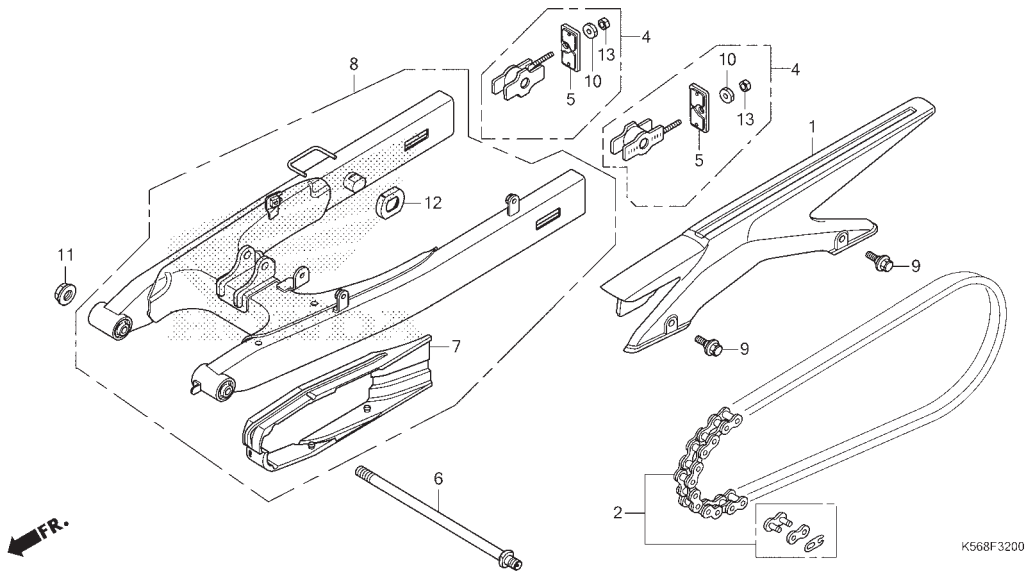

No. Ref.	L.O.N.	(Nomor ref. relatif) Deskripsi	F.R.T.
1	410195	CASE, DRIVE CHAIN.....	0,1
2	213165	CHAIN, DRIVE.....	0,2
7	4101E5	SLIDER, CHAIN.....	0,3
8	5121B0	SWINGARM ASSEMBLY.....	0,7
		CATATAN: Tidak termasuk No. Ref. 7,12	

No. Ref.	No. Part	Deskripsi	Jumlah SONIC 150R (FS150R) 2015(G)	No. Seri	Kode Parts Catalog
1	40510-K56-N00	CASE, DRIVE CHAIN	1		
2	40530-K56-N01	CHAIN, DRIVE(FSCM428H-118RB) ...	1		
	40530-K56-N02	CHAIN, DRIVE(KMC428HG-118L)	1		
4	4054A-K56-N00	ADJUSTER ASSY., COMP., CHAIN ...	2		
5	40546-K15-902	CAP, SWINGARM END	2		
6	52101-K56-N00	BOLT, SWINGARM PIVOT	1		
7	52170-K56-N00	SLIDER, CHAIN	1		
8	5210A-K56-N00	SWINGARM SUB ASSY., RR.			
		NH1 .....BLACK	1		
9	90111-162-000	BOLT, FLANGE, 6MM	2		
10	90302-KBP-900	NUT, SPECIAL, 6MM	2		
11	90302-KGH-900	NUT, SPECIAL FLANGE, 12MM	1		
12	90502-K56-N00	SPACER, RR. CALIPER	1		
13	94001-06000-0S	NUT, HEX., 6MM	2		

F-33 REAR CUSHION

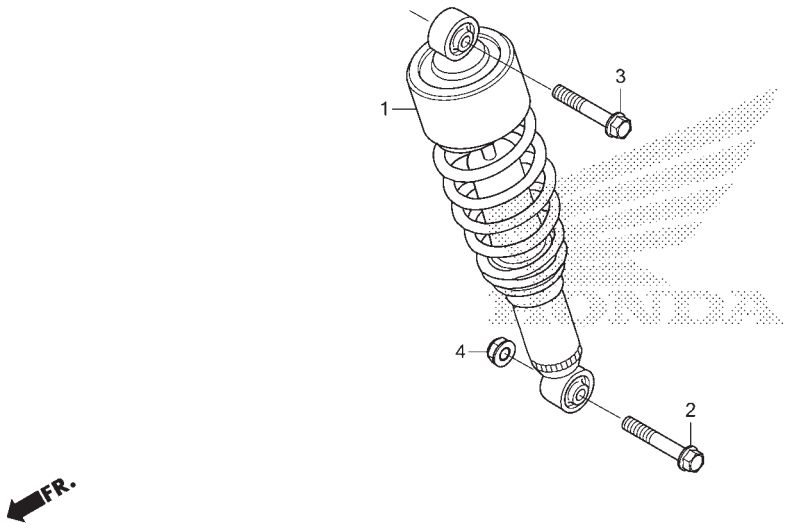

No. Ref.	L.O.N.	(Nomor ref. relatif) Deskripsi	F.R.T.
1	512115	CUSHION ASSY., REAR.....	0,6

No. Ref.	No. Part	Deskripsi	Jumlah SONIC 150R (FS150R) 2015(G)	No. Seri		Kode Parts Catalog
1	52400-K56-N20	CUSHION ASSY., RR.	1	.....	.....	REPSOL
	52400-K56-N00	.....	1	.....	.....	STANDARD
2	90103-KPP-T00	BOLT, FLANGE, 10X46	1			
3	90182-K56-N00	BOLT, FLANGE, 10X41	1			
4	90304-KGH-901	NUT, U, 10MM	1			

F-34 REAR FENDER

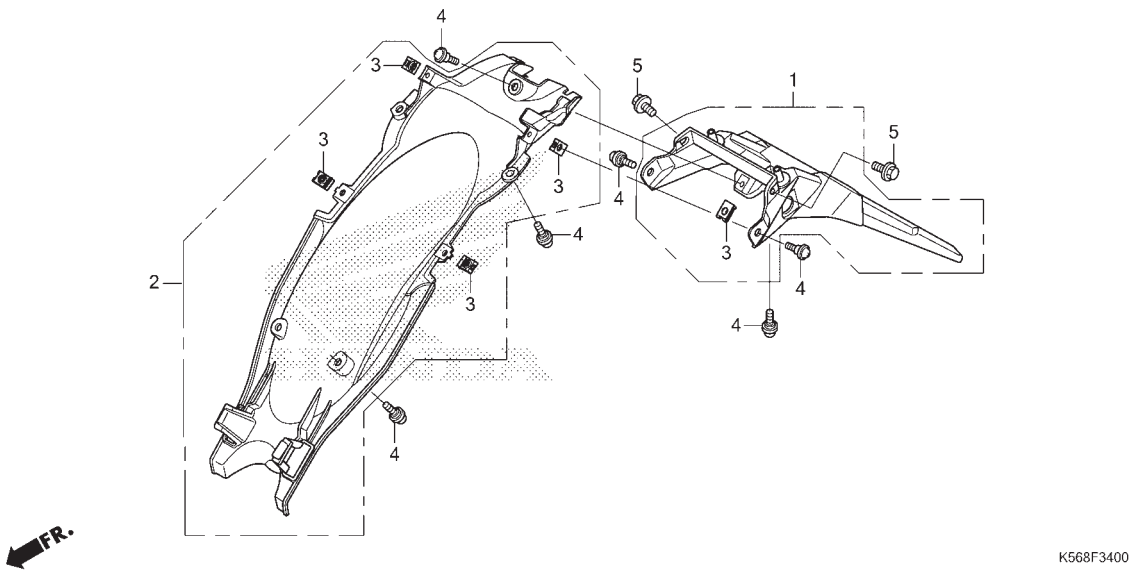

No. Ref.	L.O.N.	(Nomor ref. relatif) Deskripsi	F.R.T.
1	413102	FENDER, REAR.....	0,3
		CATATAN: Tidak termasuk No. Ref.3	
2	413110	FENDER B, REAR.....	0,3
		CATATAN: Tidak termasuk No. Ref.3	

No. Ref.	No. Part	Deskripsi	Jumlah SONIC 150R (FS150R) 2015(G)	No. Seri	Kode Parts Catalog
1	8010B-K56-N00	FENDER A, RR. ASSY.	1		
2	8015A-K56-N00	FENDER B, RR. ASSY.	1		
3	90677-KAN-T00	NUT, CLIP, 5MM	5		
4	91509-GE2-760	SCREW, PAN, 5X11.5	8		
5	95701-06010-08	BOLT, FLANGE, 6X10	2		

F-36-10 REAR COMBINATION LIGHT

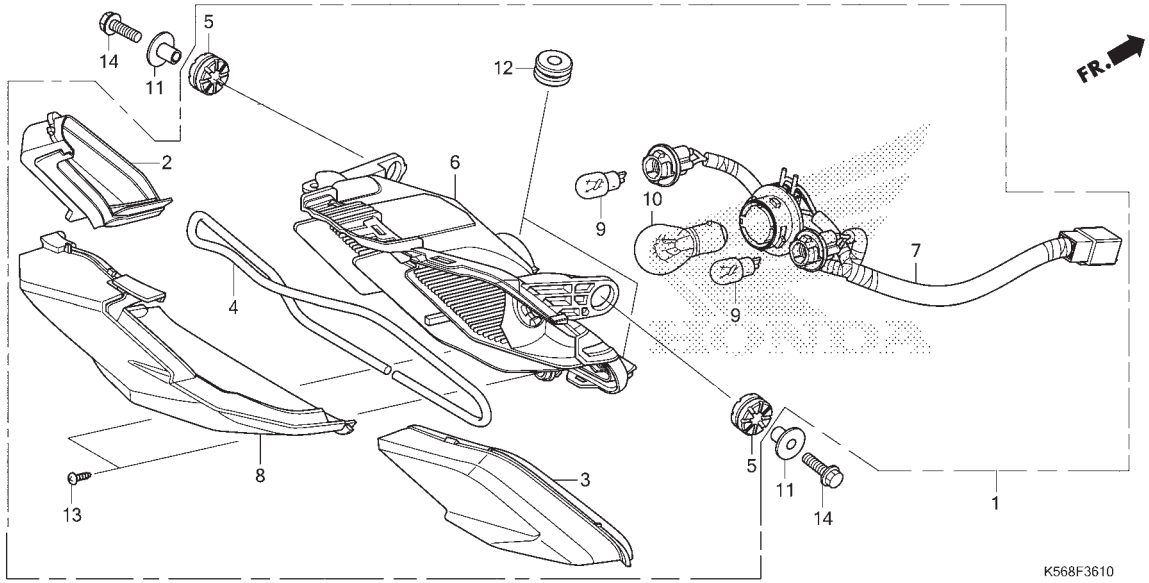

No. Ref.	L.O.N.	(Nomor ref. relatif) Deskripsi	F.R.T.
1	6161D5	TAILLIGHT UNIT.....	0,3
		CATATAN: Tidak termasuk No. Ref. 5,12	
6		(2,3,4,8)	
	6161E2	BASE, TAILLIGHT.....	0,3
7	6161E7	SOCKET, TAILLIGHT.....	0,3
9	616139	BULB, WINKER :REAR.....	0,1
		.CATATAN: Waktu sama untuk dua unit	
	6161G0	BULB, WINKER :UNTUK 1 KENDARAAN	0,2
10	6161G1	BULB, TAILLIGHT.....	0,1

No. Ref.	No. Part	Deskripsi	Jumlah SONIC 150R (FS150R) 2015(G)	No. Seri	Kode Parts Catalog
1	3370A-K56-N01	LIGHT ASSY., RR. COMBINATION (12V 18/5W)	1		
2	33703-K56-N01	LENS, L. RR. WINKER	1		
3	33704-K56-N01	LENS, R. RR. WINKER	1		
4	33705-K56-N01	PACKING A	1		
5	33705-KW7-900	RUBBER A, TAILLIGHT MOUNTING ...	2		
6	33707-K56-N01	BASE COMP., RR. COMBINATION	1		
7	33708-K56-N01	SOCKET COMP.	1		
8	33711-K56-N01	LENS COMP., TAILLIGHT	1		
9	34905-KSS-C02	BULB, WINKER(12V 10W)(AMBER) ...	2		
10	34906-K25-901	BULB, TAILLIGHT(12V 18/5W)	1		
11	61104-428-000	COLLAR, FR. FENDER	2		
12	83545-KCJ-690	RUBBER, SIDE COVER	2		
13	93901-24380	SCREW, TAPPING, 4X12	2		
14	95701-06022-08	BOLT, FLANGE, 6X22	2		

F-37 BATTERY

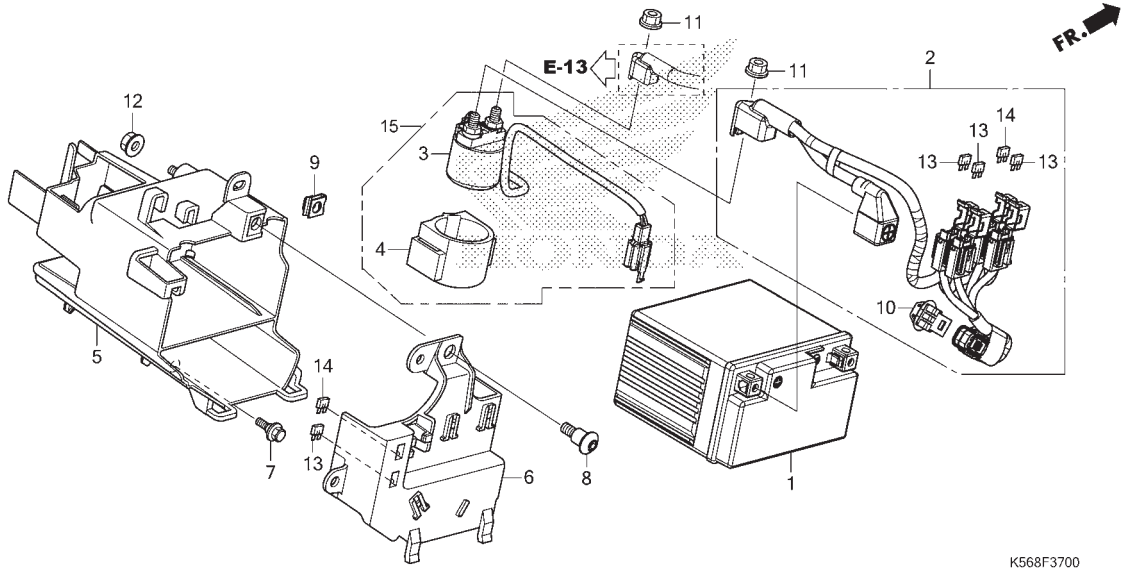

No. Ref.	L.O.N.	(Nomor ref. relatif) Deskripsi	F.R.T.
1	610100	BATTERY	0,2
2	6111F8	SUB HARNESS, BATTERY	0,6
3	615113	SWITCH, STARTER MAGNETIC	0,7
5	410185	BOX, BATTERY	0,7

No. Ref.	No. Part	Deskripsi	Jumlah SONIC 150R (FS150R) 2015(G)	No. Seri	Kode Parts Catalog
1	31500-KZR-601	BATTERY(YTZ6V)	1		
	31500-KZR-602	BATTERY(GTZ6V)	1		
2	32103-K56-N00	SUB HARNESS, BATTERY	1		
3	35850-K56-N01	SWITCH ASSY., STARTER MAGNETIC	1		
4	35856-K56-N00	RUBBER, SHOCK(MAGNETIC)	1		
5	50320-K56-N00	BOX COMP., BATTERY	1		
6	50330-K56-N00	COVER ASSY., BATTERY	1		
7	90116-KVB-900	BOLT, FLANGE, 6MM	1		
8	90132-K45-N00	SCREW, PAN, 6X17	1		
9	90305-GK8-000	NUT, CLIP, 6MM	1		
10	91565-SOX-003	CLIP, COUPLER(DARK GREEN)	1		
11	94050-0600	NUT, FLANGE, 6MM	2		
12	94050-06081	NUT, FLANGE, 6MM	1		
13	98200-41001	FUSE, MINI(10A)	4		
14	98200-42000	FUSE, MINI(20A)	2		
15	35860-K56-N00	SET, START MAG	1		

F-38 WIRE HARNESS

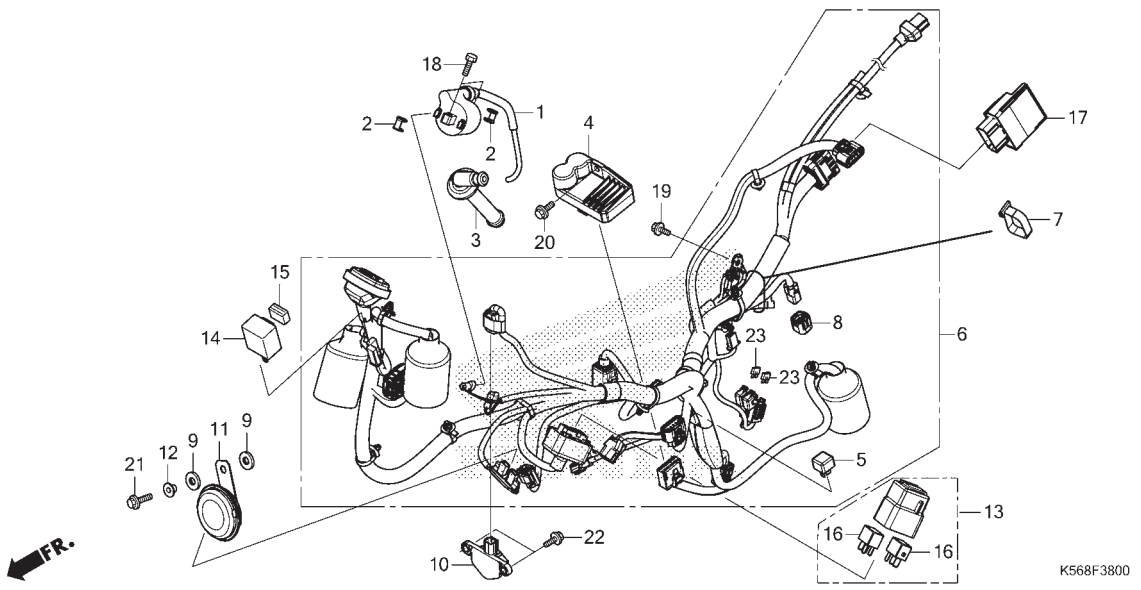

No. Ref.	L.O.N.	(Nomor ref. relatif) Deskripsi	F.R.T.
1	614105	COIL, IGNITION.....	0,7
3	6141E3	CAP, NOISE SUPPRESSOR.....	0,6
4	6131B2	RECTIFIER, REGULATE.....	0,9
5	6131B3	RECTIFIER, SILICON.....	0,7
6	611100	HARNESS, WIRE.....	1,3
10	617125	SENSOR, BANK ANGLE.....	0,3
11	616169	HORN.....	0,3
14	6111C3	RELAY, WINKER.....	0,3
16	6111D9	RELAY, FAN CONTROL.....	0,5
	6111V3	RELAY, LIGHTING CUT.....	0,5
17	618135	ENGINE CONTROL MODULE(ECM).....	0,4

No. Ref.	No. Part	Deskripsi	Jumlah SONIC 150R (FS150R) 2015(G)	No. Seri	Kode Parts Catalog
1	30510-K56-N01	COIL ASSY., IGNITION	1		
2	30520-GFM-901	SPACER, IGNITION COIL	2		
3	30700-K56-N01	CAP ASSY., NOISE SUPPRESSOR	1		
4	31600-K56-N01	RECTIFIER COMP., REGULATOR	1		
5	31700-196-000	RECTIFIER COMP., SILICON	1		
6	32100-K56-N00	HARNESS, WIRE	1		
7	32161-404-000	BAND B1, WIRE	1		
8	32606-GEV-762	CAP, DUMMY(4P)(RED)	1		
9	33714-KL3-620	RUBBER, TAILLIGHT BRACKET	2		
10	35160-KVS-751	SENSOR ASSY., BANK ANGLE(M6) ...	1		
11	38110-K56-N01	HORN COMP.(HIGH)	1		
12	38117-KPH-880	COLLAR, HORN SETTING	1		
13	38200-K56-N00	SUSPENSION, RELAY CASE(2P)	1		
14	38301-KPH-881	RELAY COMP., WINKER	1		
15	38306-KK4-000	SUSPENSION, WINKER RELAY	1		
16	38501-KVZ-631	RELAY ASSY., POWER (MICRO ISO 4P)	2		
17	38770-K56-N01	PGM-FI UNIT	1		
18	92101-06020-4J	BOLT, HEX., 6X20	2		
19	95701-06010-00	BOLT, FLANGE, 6X10	1		
20	95701-06014-0	BOLT, FLANGE, 6X14	1		
21	95701-06018-07	BOLT, FLANGE, 6X18	1		
22	96001-06014-00	BOLT, FLANGE, 6X14	2		
23	98200-41001	FUSE, MINI(10A)	2		

F-39 FRAME BODY

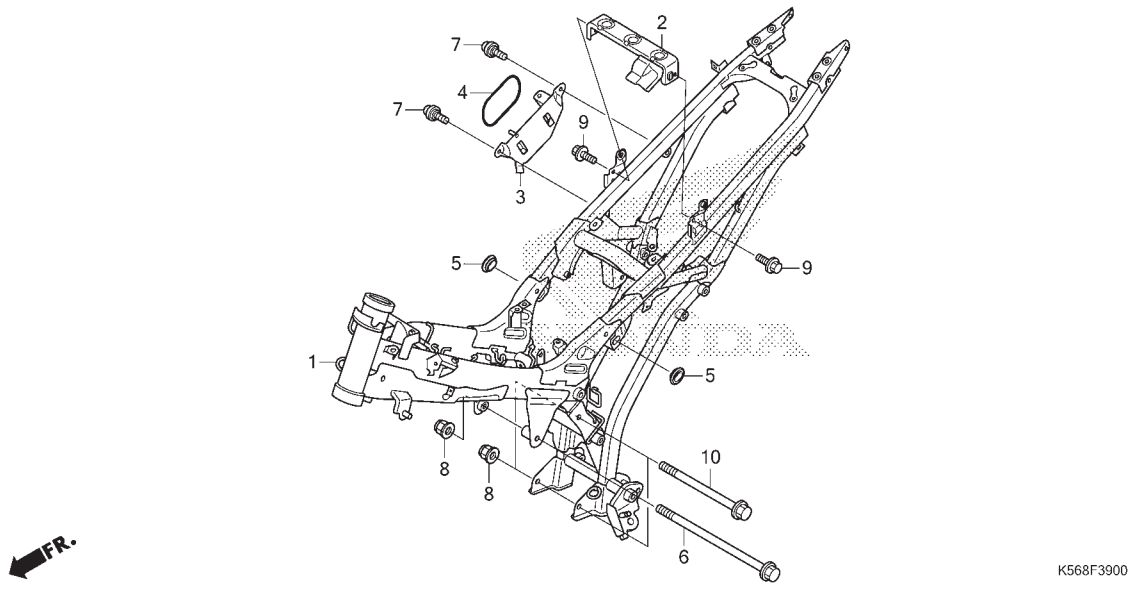

No. Ref.	L.O.N.	(Nomor ref. relatif) Deskripsi	F.R.T.
1	410100	BODY, FRAME..... .TERMASUK: Penurunan dan pemasangan mesin	5,6

No. Ref.	No. Part	Deskripsi	Jumlah SONIC 150R (FS150R) 2015(G)	No. Seri	Kode Parts Catalog
1	50100-K56-N00	BODY COMP., FRAME	1		
2	50195-K56-N00	BRACKET, SEAT	1		
3	64800-K56-N00	TRAY, PGM-FI UNIT	1		
4	80123-KCC-870	BAND, TOOL	1		
5	83551-GE2-000	GROMMET, AIR CLEANER CASE	2		
6	90101-K28-910	BOLT, FLANGE, 10X155	1		
7	91509-GE2-760	SCREW, PAN, 5X11.5	2		
8	94050-10001	NUT, FLANGE, 10MM	3		
9	95701-06010-00	BOLT, FLANGE, 6X10	2		
10	95701-10115-00	BOLT, FLANGE, 10X115	2		

F-41 RADIATOR

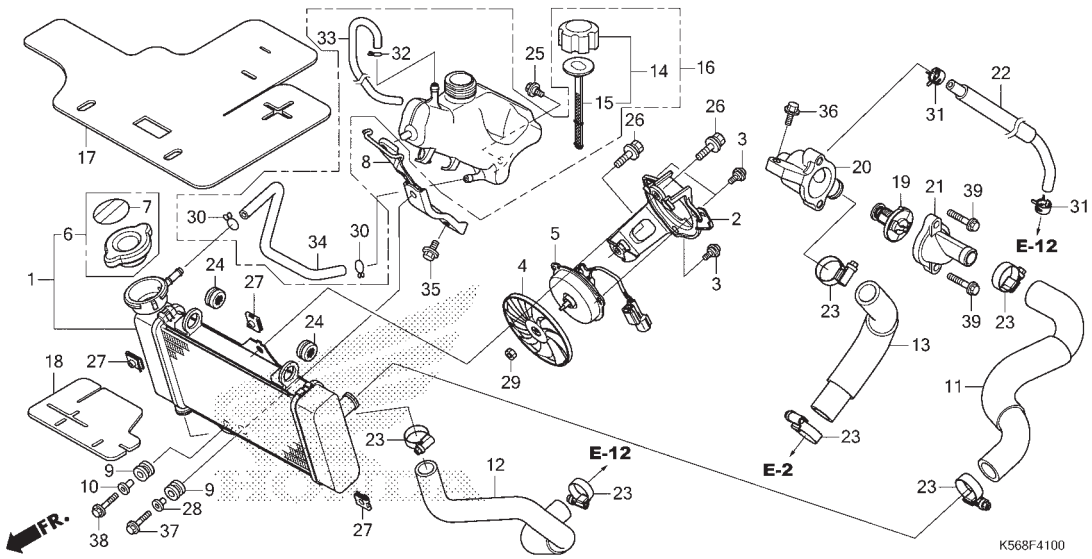

No. Ref.	L.O.N.	(Nomor ref. relatif) Deskripsi	F.R.T.
1	1151C3	RADIATOR.....	0,8
2	115125	SHROUD, RADIATOR.....	0,8
4	1151A6	FAN, COOLING.....	0,8
5	1151A7	MOTOR, FAN.....	0,9
6	1151B8	CAP, RADIATOR.....	0,2
11	115103	HOSE, RADIATOR :UPPER.....	0,7
12	115104	HOSE, RADIATOR :LOWER.....	0,7
13	1141C8	HOSE, THERMOBODY.....	0,7
16	115110	TANK, RADIATOR RESERVE.....	0,6
		CATATAN: Tidak termasuk No.Ref. 14,15,30,32,33,34	
19	114116	THERMOSTAT.....	0,6
20	114117	CASE, THERMOSTAT.....	0,5
21	1141B3	COVER, THERMOSTAT.....	0,5
22	1141P7	TUBE, THERMOSTAT CASE.....	0,7
34	1151E5	TUBE, RADIATOR RESERVE TANK....	0,6

No. Ref.	No. Part	Deskripsi	Jumlah SONIC 150R (FS150R) 2015(G)	No. Seri	Kode Parts Catalog
1	19010-K56-N01	RADIATOR COMP.	1		
2	19015-K56-N01	SHROUD COMP.	1		
3	19016-KEA-003	SCREW, PAN, 4X8.5	3		
4	19020-KPP-T02	FAN COMP., COOLING	1		
5	19030-K56-N01	MOTOR COMP., FAN	1		
6	19037-KVB-903	CAP COMP., RADIATOR	1		
7	19046-KVB-902	LABEL, RADIATOR CAP	1		
8	19050-K56-N00	STAY, RADIATOR LOWER	1		
9	19051-KGB-611	RUBBER, RADIATOR MOUNTING	2		
10	19052-MEG-H10	COLLAR, RADIATOR MOUNTING	1		
11	19061-K56-N00	HOSE, RADIATOR INLET	1		
12	19062-K56-N00	HOSE, RADIATOR OUTLET	1		
13	19063-K56-N00	HOSE, HEAD OUTLET	1		
14	19105-K56-N00	CAP ASSY., RESERVE TANK	1		
15	19106-K56-N00	PACKING ASSY., RESERVE TANK	1		
16	1911A-K56-N00	TANK ASSY., RADIATOR RESERVE ...	1		
17	19125-K56-N00	RUBBER, HEAT GUARD	1		
18	19127-K56-N00	RUBBER, RADIATOR LOWER	1		
19	19300-K56-N01	THERMOSTAT	1		
20	19311-K56-N00	CASE COMP., THERMOSTAT	1		
21	19315-KGH-901	COVER, THERMOSTAT	1		
22	19320-K56-N00	TUBE, BYPASS	1		
23	19505-K45-N00	CLAMP, WATER HOSE	6		

F-41 RADIATOR

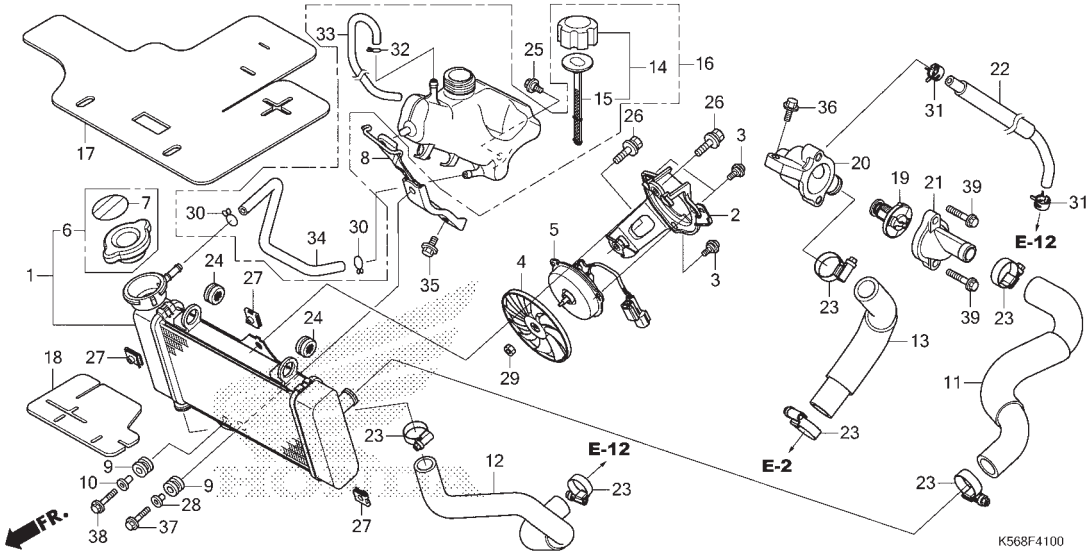

No. Ref.	No. Part	Deskripsi	Jumlah SONIC 150R (FS150R) 2015(G)	No. Seri	Kode Parts Catalog
24	61304-415-000	RUBBER, HEADLIGHT CASE MOUNTING	2		
25	90116-KVB-900	BOLT, FLANGE, 6MM	1		
26	90120-KCR-003	BOLT-WASHER, 6X16	2		
27	90201-KPR-901	NUT, CLIP, 6MM	3		
28	90501-GR2-000	COLLAR, 6.2X11	1		
29	94001-03000-0S	NUT, HEX., 3MM	1		
30	95002-02100	CLIP, TUBE(B10)	2		
31	95002-41050-09	CLAMP, TUBE(D10.5)	2		
32	95002-50000	CLIP, TUBE(C9)	1		
33	95005-50490-30	TUBE, 5X490(95005-50001-30M) ...	1		
34	95005-55320-20	TUBE, 5.3X320(95005-55001-10M) .	1		
35	95701-06014-0	BOLT, FLANGE, 6X14	1		
36	95701-06016-00	BOLT, FLANGE, 6X16	1		
37	95701-06022-01	BOLT, FLANGE, 6X22	1		
38	95701-06025-00	BOLT, FLANGE, 6X25	1		
39	96001-06025-00	BOLT, FLANGE, 6X25	2		

F-43 FRONT COWL

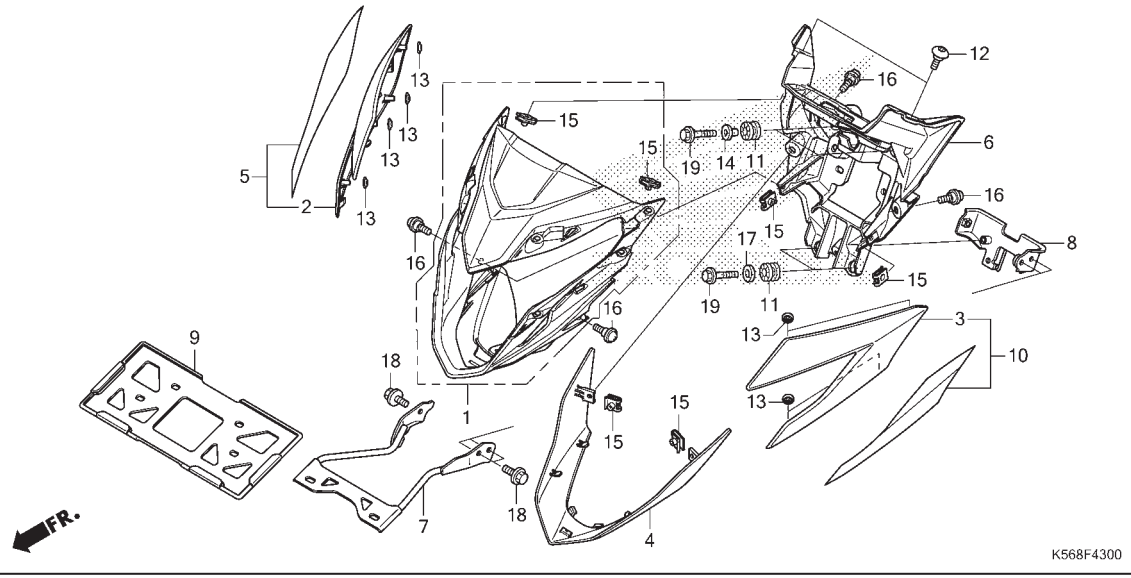

No. Ref.	L.O.N.	(Nomor ref. relatif) Deskripsi	F.R.T.
1	4111L3	COWL, FRONT CENTER.....	0,5
		CATATAN: Tidak termasuk No. Ref. 15	
4	4131FX	COVER, HEADLIGHT :LOWER.....	0,1
5		(2)	
	4111L5	COWL, FRONT :RIGHT.....	0,4
6	413135	COVER, HEADLIGHT.....	0,4
10		(3)	
	4111L4	COWL, FRONT :LEFT.....	0,4
	4111L6	COWL, FRONT :KEDUA-DUANYA.....	0,5

No. Ref.	No. Part	Deskripsi	Jumlah SONIC 150R (FS150R) 2015(G)	No. Seri		Kode Parts Catalog
1	6130B-K56-N00	COWL ASSY., FR. CENTER(WL)	1			
2	61302-K56-N00ZB	COWL, R. FR. SIDE				
		R258 .....WINNING RED	1	.....	.....	STANDARD
	61302-K56-N00ZC	*RP195* SPACE MAGENTA METALLIC	1	.....	.....	STANDARD
	61302-K56-N00ZD	*NH196* .....ROSS WHITE	1	.....	.....	STANDARD
	61302-K56-N00ZE	*NH1* .....BLACK	1	.....	.....	STANDARD
3	61303-K56-N00ZB	COWL, L. FR. SIDE				
		R258 .....WINNING RED	1	.....	.....	STANDARD
	61303-K56-N00ZC	*RP195* SPACE MAGENTA METALLIC	1	.....	.....	STANDARD
	61303-K56-N00ZD	*NH196* .....ROSS WHITE	1	.....	.....	STANDARD
	61303-K56-N00ZE	*NH1* .....BLACK	1	.....	.....	STANDARD
4	61304-K56-N00ZD	COWL, FR. UNDER				
		NH196 .....ROSS WHITE	1	.....	.....	STANDARD
	61304-K56-N00ZA	*R258* .....WINNING RED	1	.....	.....	STANDARD
	61304-K56-N00ZB	*RP195* SPACE MAGENTA METALLIC	1	.....	.....	STANDARD
	61304-K56-N00ZC	*NH255M* SHIMMER SILVER METALLIC	1	.....	.....	STANDARD
5	61302-K56-N00NOR	COWL, R. FR. SIDE(WL)				
		YR271 .....NITRIC ORANGE	1	.....	.....	REPSOL
6	6131B-K56-N00	COVER ASSY., HEADLIGHT RR.	1			
7	61313-K56-N00	STAY, FR. NUMBER PLATE	1			
8	61314-K56-N00	BRACKET, NUMBER PLATE	1			
9	61316-KCJ-661	GUARD, NUMBER PLATE	1			
10	61303-K56-N00NOR	COWL, L. FR. SIDE(WL)				
		YR271 .....NITRIC ORANGE	1	.....	.....	REPSOL
11	64615-KR1-860	RUBBER, LOWER COWL MOUNTING	4			

F-43 FRONT COWL

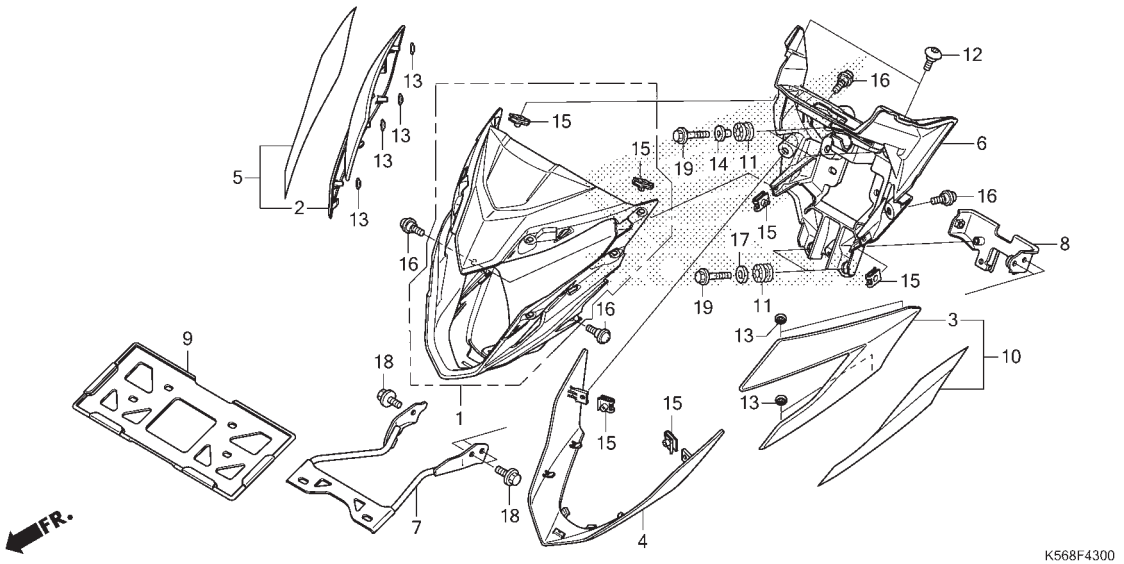

No. Ref.	No. Part	Deskripsi	Jumlah SONIC 150R (FS150R) 2015(G)	No. Seri	Kode Parts Catalog
12	90134-KPP-T01	SCREW, PAN, 5X14	2		
13	90301-K12-900	NUT, PUSH, 6MM	8		
14	90310-KWS-900	COLLAR, FR. COWL	2		
15	90677-KAN-T00	NUT, CLIP, 5MM	6		
16	91509-GE2-760	SCREW, PAN, 5X11.5	4		
17	94103-06000	WASHER, PLAIN, 6MM	2		
18	95701-06010-00	BOLT, FLANGE, 6X10	3		
19	95701-06022-08	BOLT, FLANGE, 6X22	4		

F-48 TOOLS

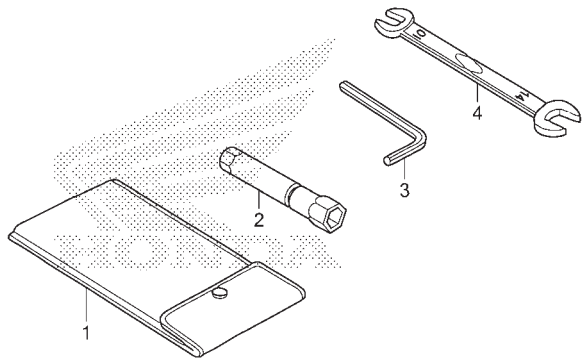

K568F4800

No. Ref.	L.O.N.	(Nomor ref. relatif) Deskripsi	F.R.T.
		TIDAK ADA INFORMASI	

No. Ref.	No. Part	Deskripsi	Jumlah SONIC 150R (FS150R) 2015(G)	No. Seri	Kode Parts Catalog
1	83642-171-001	BAG, OWNERS MANUAL	1		
2	89216-KPP-900	WRENCH, SPARK PLUG	1		
3	89221-429-000	WRENCH, HEX., 5MM	1		
4	99001-10140	SPANNER, 10X14	1		

F-49 CAUTION LABEL

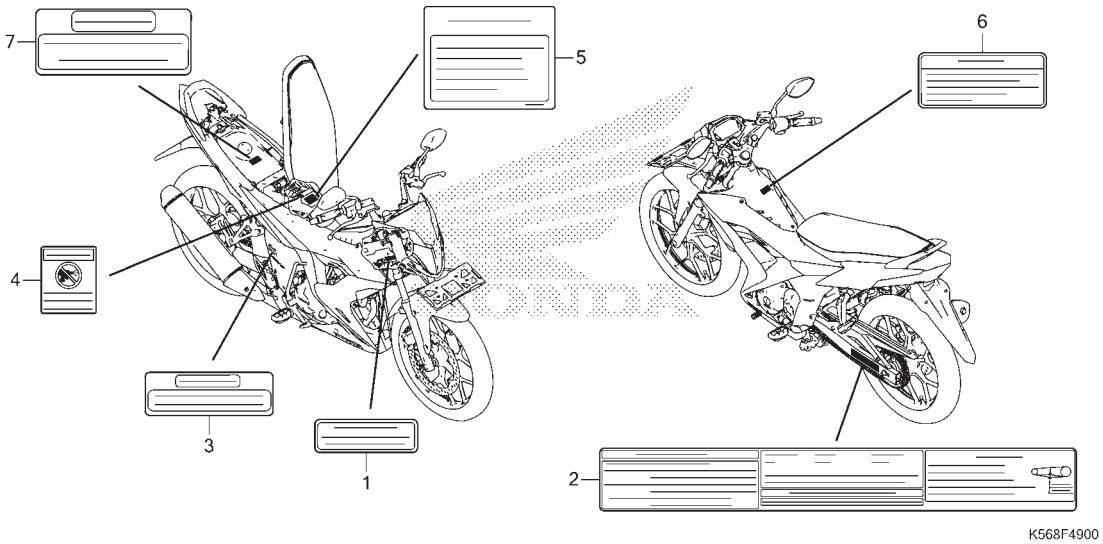

No. Ref.	L.O.N.	(Nomor ref. relatif) Deskripsi	F.R.T.
		TIDAK ADA INFORMASI	

No. Ref.	No. Part	Deskripsi	Jumlah SONIC 150R (FS150R) 2015(G)	No. Seri	Kode Parts Catalog
1	87503-KVB-930	LABEL, COOLANT INFORMATION	1		
2	87505-K56-N00	LABEL, TIRE & DRIVE CHAIN	1		
3	87506-KPH-880	MARK, BATTERY CAUTION	1		
4	87509-KWW-A40	LABEL, AIR CLEANER ELEMENT NOTICE	1		
5	87517-K56-N00	LABEL, AIR INTAKE NOTICE	1		
6	87560-KVB-930	LABEL, DRIVE CAUTION	1		
7	87586-KTM-780	LABEL, FUEL CAUTION	1		

F-50 MARK/STRIPE(FS150R-STANDARD)

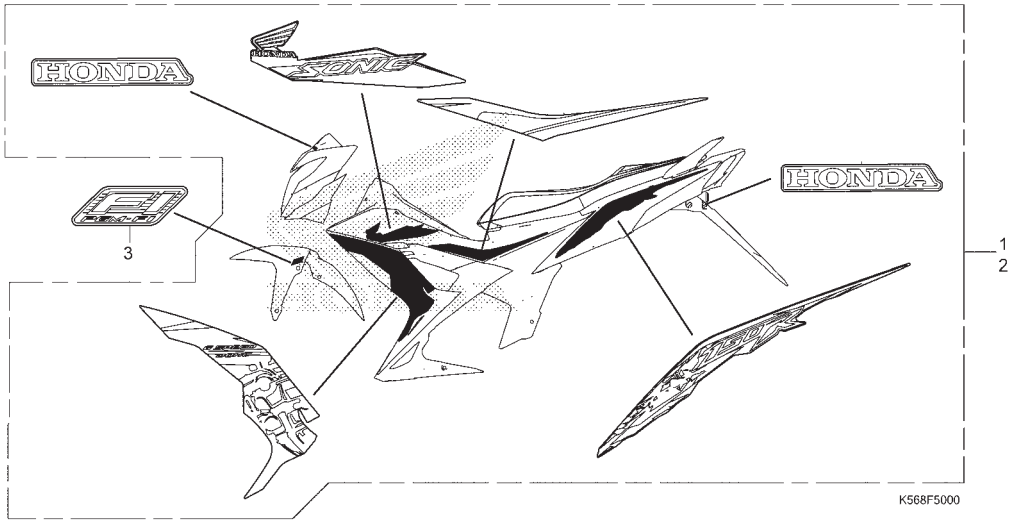

No. Ref.	L.O.N.	(Nomor ref. relatif) Deskripsi	F.R.T.
		TIDAK ADA INFORMASI	

No. Ref.	No. Part	Deskripsi	Jumlah SONIC 150R (FS150R) 2015(G)		No. Seri		Kode Parts Catalog
1	871X0-K56-N00ZAR	STRIPE SET, R.					
		BLACK	1		.....	.....	STANDARD
	871X0-K56-N00ZBR	WHITE	1		.....	.....	STANDARD
	871X0-K56-N00ZCR	RED	1		.....	.....	STANDARD
	871X0-K56-N00ZDR	PINK	1		.....	.....	STANDARD
2	871X0-K56-N00ZAL	STRIPE SET, L.					
		BLACK	1		.....	.....	STANDARD
	871X0-K56-N00ZBL	WHITE	1		.....	.....	STANDARD
	871X0-K56-N00ZCL	RED	1		.....	.....	STANDARD
	871X0-K56-N00ZDL	PINK	1		.....	.....	STANDARD
3	86531-KYZ-710ZA	MARK (FI)	1		.....	.....	STANDARD

F-50-1 MARK/STRIPE(FS150R-REPSOL)

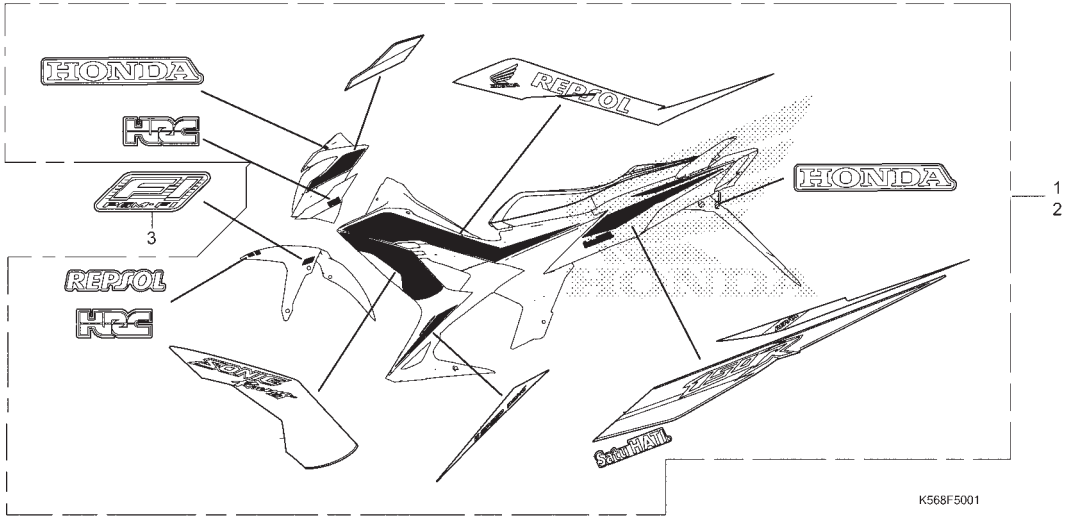

No. Ref.	L.O.N.	(Nomor ref. relatif) Deskripsi	F.R.T.
TIDAK ADA INFORMASI			

No. Ref.	No. Part	Deskripsi	Jumlah SONIC 150R (FS150R) 2015(G)	No. Seri		Kode Parts Catalog
1	871X1-K56-N20ZAR	STRIPE SET, R. ORANGE	1	.....	.....	REPSOL
2	871X0-K56-N20ZAL	STRIPE SET, L. ORANGE	1	.....	.....	REPSOL
3	86531-KYZ-710ZA	MARK (FI)	1	.....	.....	REPSOL

3

INDEKS NOMOR PART

Nomor Part	No. Blok	Ref
(00000)		
06435-K56-N01	F-17	1
06451-961-405	F-12-10	1
06451-MA7-406	F-17	2
06455-K56-N01	F-12-10	2
06531-KW6-840	F-9	1
(10000)		
11100-K56-N00	E-15	1
11102-K56-N00	E-6	1
11200-K56-N00	E-15	2
11330-K56-N00	E-6	2
11330-K56-N20	E-6	2
11333-KGH-901	E-6	3
11334-K56-N00	E-6	4
11341-K56-N00	E-10	1
11341-K56-N20	E-10	1
11360-K56-N00	E-10	2
11394-K56-N00	E-6	5
11395-K56-N00	E-10	3
12010-K56-N00	E-2	1
12100-K56-N00	E-5	1
12191-K56-N01	E-5	2
12205-KYJ-305	E-2	2
12207-KYJ-900	E-2	3
12209-K56-N01	E-3	1
12209-MLO-722	E-3	1
12251-K56-N01	E-2	4
12251-K56-N02	E-2	4
12311-K56-N00	E-1	1
12311-K56-N20	E-1	1
12391-K56-N00	E-1	2
13000-K56-N00	E-16	1
13011-K56-N00	E-16	2
13021-K56-N00	E-16	2
13031-K56-N00	E-16	2
13101-K56-N00	E-16	3
13102-K56-N00	E-16	3
13103-K56-N00	E-16	3
13111-K56-N00	E-16	4
13115-KZY-701	E-16	5
13420-K56-N00	E-16	6
13422-KPP-86Z	E-16	7
13423-KPP-860	E-16	9
13424-KPP-860	E-16	9
13425-KGH-900	E-16	8
13425-KWC-900	E-16	8
13427-KPP-860	E-16	9
13538-KGH-901	E-16	10
14110-K56-N00	E-3	2
14210-K56-N00	E-3	3
14401-K56-N01	E-4	1
14430-K56-N00	E-3	4
14440-K56-N00	E-3	5
14451-K56-N00	E-3	6
14510-K56-N00	E-4	2
14515-K56-N00	E-4	3
14520-KPP-T01	E-4	4
14521-KPP-900	E-15	3
14531-KPP-900	E-15	4
14546-K56-N00	E-4	5
14560-KSP-910	E-4	6
14611-K56-N00	E-4	7
14711-K56-N00	E-3	7
14721-K56-N00	E-3	8
14751-K56-N01	E-3	9
14761-K56-N01	E-3	10
14771-MFL-000	E-3	11
14775-K56-N00	E-3	12
14781-MLO-720	E-3	13
14913-KT7-013	E-3	14
14914-KT7-013	E-3	14
14915-KT7-013	E-3	14
14916-KT7-013	E-3	14
14917-KT7-013	E-3	14
14918-KT7-013	E-3	14
14919-KT7-013	E-3	14
14920-KT7-013	E-3	14
14921-KT7-013	E-3	14
14922-KT7-013	E-3	14
14923-KT7-013	E-3	14
14924-KT7-013	E-3	14
14925-KT7-013	E-3	14
14926-KT7-013	E-3	14
14927-KT7-013	E-3	14
14928-KT7-013	E-3	14
14929-KT7-013	E-3	14
14930-KT7-013	E-3	14
14931-KT7-013	E-3	14
14932-KT7-013	E-3	14
14933-KT7-013	E-3	14
14934-KT7-013	E-3	14
14935-KT7-013	E-3	14
14936-KT7-013	E-3	14
14937-KT7-013	E-3	14
14938-KT7-013	E-3	14
14939-KT7-013	E-3	14
14940-KT7-013	E-3	14
14941-KT7-013	E-3	14
14942-KT7-013	E-3	14
14943-KT7-013	E-3	14
14944-KT7-013	E-3	14
14945-KT7-013	E-3	14
14946-KT7-013	E-3	14
14947-KT7-013	E-3	14
14948-KT7-013	E-3	14
14949-KT7-013	E-3	14
14950-KT7-013	E-3	14
14951-KT7-013	E-3	14
14952-KT7-013	E-3	14
14953-KT7-013	E-3	14
14954-KT7-013	E-3	14
14955-KT7-013	E-3	14
14956-KT7-013	E-3	14
14957-KT7-013	E-3	14
14958-KT7-013	E-3	14
14959-KT7-013	E-3	14
14960-KT7-013	E-3	14
14961-KT7-013	E-3	14
14962-KT7-013	E-3	14
14963-KT7-013	E-3	14
14964-KT7-013	E-3	14
14965-KT7-013	E-3	14
14966-KT7-013	E-3	14
14967-KT7-013	E-3	14
14968-KT7-013	E-3	14
14969-KT7-013	E-3	14
15100-KPP-T01	E-14	2
15133-KPP-T00	E-14	3
15331-436-000	E-14	9
15332-436-000	E-14	10
15421-KSP-910	E-15	5
15651-KGH-900	E-6	6
15772-MN1-670	F-25	1
16060-KVS-J01	E-23	1
16075-K40-F01	E-23	2
16076-K35-V01	E-23	3
16077-K35-V01	E-23	4
16081-K56-N01	E-23	5
16169-K56-N01	E-23	6
16400-K56-N01	E-23	7
16410-K56-N01	E-23	8
16430-K56-N01	E-23	9
16450-K56-N01	E-23	10
16472-KPC-D51	E-23	11
16700-K56-N01	F-21	1
16706-KVB-S51	F-21	2
16707-K56-N01	F-21	3
17111-K56-N00	E-2	5
17119-K56-N00	E-2	6
17210-K56-N00	F-25	2
17213-K56-N00	F-25	3
17213-K56-N00	F-25	4
17214-K56-N00	F-25	5
17225-K56-N00	F-25	6
17235-K56-N00	F-25	7
17240-K56-N00	F-25	8
17245-K56-N00	F-25	9
17253-K56-N00	F-25	10
17256-K56-N00	F-25	11
17370-419-701	F-25	12
1737A-K56-N00	F-25	13
17410-K56-N00	F-25	14
17505-K56-N00	F-21	4
17510-K56-N00	F-21	9
17517-GGL-J00	F-21	5
17518-GGL-J00	F-21	6
17518-K56-N00	F-21	7
17519-K56-N00	F-21	8
17560-K56-N00	E-23	12
17572-GGL-J00	F-21	10
17620-KGH-600	F-21	11
17631-KEV-900	F-21	12
17650-K56-N01	F-21	13
17910-K56-N00	F-4	1
17920-K56-N00	F-4	2
18291-MN5-651	F-27	1
18293-MCA-A20	F-27	2
18300-K56-N00	F-27	3
18345-MBT-610	F-27	4
18356-K56-N00	F-27	5
18421-KE8-001	F-27	6
18422-KGC-901	F-27	7
19010-K56-N01	F-41	1
19015-K56-N01	F-41	2
19016-KEA-003	F-41	3
19020-KPP-T02	F-41	4
19030-K56-N01	F-41	5
19037-KVB-903	F-41	6
19046-KVB-902	F-41	7
19050-K56-N00	F-41	8
19051-KGB-611	F-41	9
19052-MEG-H10	F-41	10
19061-K56-N00	F-41	11
19062-K56-N00	F-41	12
19063-K56-N00	F-41	13
19064-KPP-900	E-2	7
19105-K56-N00	F-41	14
19106-K56-N00	F-41	15
1911A-K56-N00	F-41	16
19125-K56-N00	F-41	17
19127-K56-N00	F-41	18
19215-KGH-901	E-12	1
19217-P72-014	E-12	2
19220-K56-N20	E-12	3
19226-K56-N00	E-12	4
19241-K56-N00	E-12	5
19242-K56-N00	E-12	6
19300-K56-N01	F-41	19
19311-K56-N00	F-41	20
19315-KGH-901	F-41	21
19320-K56-N00	F-41	22
19505-K45-N00	F-41	23
19509-KPH-900	F-25	15
(20000)		
22000-K56-N01	E-8	17
22100-K56-N01	E-8	1
22105-K56-N00	E-8	2
22121-K56-N01	E-8	3

4

INDEKS NOMOR PART

Nomor Part	No. Blok	Ref
22201-K56-N01	E-8	4
22321-KWW-742	E-8	5
22350-K56-N01	E-8	6
22361-K56-N01	E-8	7
22401-K56-N01	E-8	8
22810-K56-N00	E-6	7
22815-KM7-700	E-6	8
22821-K56-N00	E-6	9
22849-K15-900	E-8	9
22870-K56-N00	F-4	3
23010-K56-N01	E-17	41
23020-K56-N02	E-17	42
23121-K56-N00	E-8	10
23122-K56-N00	E-8	10
23123-K56-N00	E-8	10
23211-K56-N00	E-17	1
23221-K56-N00	E-17	2
23415-HB3-000	E-17	3
23421-K56-N00	E-17	4
23431-K56-N00	E-17	5
23441-K56-N00	E-17	6
23442-K56-N00	E-17	7
23451-K56-N00	E-17	8
23461-K56-N00	E-17	9
23465-K56-N00	E-17	10
23481-K56-N00	E-17	11
23491-K56-N00	E-17	12
23492-KSP-910	E-17	13
23501-K56-N00	E-17	14
23502-KTY-D30	E-17	15
23511-K56-N00	E-17	16
23521-K56-N01	E-17	17
23801-KBP-901	E-17	18
23811-KR3-600	E-17	19
24211-K56-N00	E-19	1
24212-KPP-901	E-19	2
24213-K56-N00	E-19	3
24241-KPP-901	E-19	4
24301-K56-N00	E-19	5
24410-K15-900	E-19	6
24430-K56-N00	E-19	7
24436-KTY-D30	E-19	8
24610-KPP-900	E-19	9
24641-KBP-901	E-19	10
24651-KTY-D30	E-19	11
24652-035-000	E-19	12
24701-K56-N00	F-29	1
24703-KW6-840	F-29	2
24711-K56-N00	F-29	3
24720-K56-N00	F-29	4
24721-K56-N00	F-29	5
24722-K56-N00	F-29	20
24781-KRM-860	F-29	6
28110-KGH-911	E-9	1
28125-HC3-017	E-9	2

Nomor Part	No. Blok	Ref
28131-K15-901	E-9	3
28132-KGH-911	E-9	4
28133-KPP-901	E-9	5
28200-K56-N00	E-20	11
28211-K56-N00	E-20	1
28215-KGH-901	E-20	2
28221-K56-N00	E-20	3
28223-KM7-702	E-20	4
28251-K15-900	E-20	5
28254-437-001	E-20	6
28261-KGH-901	E-20	7
28282-KGH-901	E-20	8
28293-333-000	F-29	7
28300-K56-N00	F-29	8
28333-300-000	F-30	1
28333-KK0-000	F-29	9
(30000)		
30510-K56-N01	F-38	1
30520-GFM-901	F-38	2
30700-K56-N01	F-38	3
31110-K56-N01	E-11	1
31120-K56-N01	E-11	2
31200-K56-N01	E-13	1
31201-KPT-A01	E-13	2
31204-KG8-004	E-13	3
31205-KTC-921	E-13	4
31206-KPP-T01	E-13	5
31207-MBE-009	E-13	6
31500-KZR-601	F-37	1
31500-KZR-602	F-37	1
31600-K56-N01	F-38	4
31700-196-000	F-38	5
31919-K25-601	E-2	8
31919-K25-602	E-2	8
32100-K56-N00	F-38	6
32103-K56-N00	F-37	2
32121-K56-N00	E-15	6
32123-K56-N00	E-10	4
32161-404-000	F-38	7
32410-K56-N00	E-13	7
32411-253-001	E-13	8
32606-GEV-762	F-38	8
33100-K56-N01	F-1	6
33110-K56-N01	F-1	1
33150-K56-N01	F-1	2
33703-K56-N01	F-36-10	2
33704-K56-N01	F-36-10	3
33705-K56-N01	F-36-10	4
33705-KW7-900	F-36-10	5
33707-K56-N01	F-36-10	6
33708-K56-N01	F-36-10	7
3370A-K56-N01	F-36-10	1
33711-K56-N01	F-36-10	8
33714-KL3-620	F-38	9

Nomor Part	No. Blok	Ref
33741-KAN-961	F-23-10	1
34905-KSS-C02	F-1	3
	F-36-10	9
34906-K25-901	F-36-10	10
35010-K56-N00	F-7	1
35105-K56-N00	F-7	4
35150-K56-N01	F-4	4
35152-KRY-971	F-4	5
35160-KVS-751	F-38	10
35200-K56-N01	F-4	6
35330-413-003	F-4	7
35340-KWB-601	F-5	1
35350-K56-N01	F-29	10
35357-KY1-000	F-29	11
35751-KPH-900	E-19	13
35752-KPH-900	E-19	14
35759-K56-N01	E-15	7
35850-K56-N01	F-37	3
35856-K56-N00	F-37	4
35860-K56-N00	F-37	15
36532-K56-N01	F-27	8
37100-K56-N01	F-2	1
37130-K56-N00	F-2	2
37215-KZZ-900	F-2	3
37610-K56-N00	F-2	4
37620-K56-N00	F-2	5
37700-K56-N01	E-15	8
37800-K56-N01	F-21	14
37870-KZR-601	E-2	9
38110-K56-N01	F-38	11
38117-KPH-880	F-38	12
38200-K56-N00	F-38	13
38301-KPH-881	F-38	14
38306-KK4-000	F-38	15
38501-KVZ-631	F-38	16
38770-K56-N01	F-38	17
(40000)		
40510-K56-N00	F-32	1
40530-K56-N01	F-32	2
40530-K56-N02	F-32	2
40546-K15-902	F-32	5
4054A-K56-N00	F-32	4
41200-K56-N00	F-19-40	2
41241-KW7-881	F-19-40	1
42301-K56-N00	F-19-40	3
42303-KAN-T40	F-19-40	4
42304-KPP-900	F-19-40	5
42313-KGH-901	F-19-40	6
42601-K59-N00ZA	F-19-40	9
42601-K59-N00ZB	F-19-40	9
42611-K56-N00	F-19-40	23
42615-K56-N00	F-19-40	7
42620-K56-N00	F-19-40	8
42653-001-004	F-19-40	10

Nomor Part	No. Blok	Ref
42704-MER-D00	F-14-40	1
42705-MER-D00	F-14-40	1
42706-MER-D00	F-14-40	1
42711-K56-N00	F-19-40	11
42753-KWF-901	F-14-40	2
	F-19-40	12
43107-MA7-007	F-17	3
43108-KSP-B51	F-17	4
43112-KSP-B01	F-17	5
43150-K56-N01	F-17	6
43190-K56-N01	F-17	7
43215-KGH-902	F-17	8
43310-K56-N01	F-15	1
43351-K56-N01	F-19-40	13
43352-568-004	F-12-10	3
	F-17	9
43353-461-772	F-12-10	4
	F-17	10
43503-MER-D01	F-15	2
43504-MB2-007	F-15	3
43510-K56-N01	F-15	4
43511-KW7-882	F-15	5
43512-K56-N01	F-15	6
43513-KBP-882	F-15	7
43514-KS6-702	F-15	8
43520-MJ6-316	F-15	9
43530-KV3-702	F-15	10
44301-K56-N00	F-14-40	3
44311-K56-N00	F-14-40	4
44601-K56-N00ZA	F-14-40	6
44601-K56-N00ZB	F-14-40	6
44620-KPH-951	F-14-40	5
44711-K56-N00	F-14-40	7
45111-MAJ-G42	F-12-10	5
	F-17	11
45126-K56-N01	F-5	2
45131-GZ0-007	F-12-10	6
45132-166-017	F-12-10	7
	F-17	12
45133-MA3-007	F-12-10	8
	F-17	13
45155-K56-N00	F-5	3
45156-K20-900	F-15	11
45156-K56-N00	F-5	4
45203-MCC-007	F-17	14
45208-KWB-601	F-12-10	9
45215-KPH-951	F-12-10	10
45216-166-007	F-12-10	11
45218-KWB-601	F-12-10	12
45250-K56-N01	F-12-10	13
45251-K56-N01	F-14-40	8
45290-K56-N01	F-12-10	14
45504-410-004	F-5	5
45510-KZY-702	F-5	6
45512-MA6-007	F-5	7

4

INDEKS NOMOR PART

Nomor Part	No. Blok	Ref
45513-HA2-007	F-5	8
45517-166-007	F-4	8
	F-5	9
45520-GE2-007	F-5	10
45520-GW0-912	F-15	12
45521-GW0-913	F-15	13
45521-K21-902	F-5	11
45530-471-831	F-5	12
46182-MEL-D21	F-15	14
46500-K56-N00	F-29	12
46504-KV6-703	F-15	15
46514-K56-N00	F-29	13
(50000)		
50100-K56-N00	F-39	1
50193-K56-N00	F-23	1
50195-K56-N00	F-39	2
50301-KTR-900	F-9	2
50320-K56-N00	F-37	5
50330-K56-N00	F-37	6
50400-K56-N00ZA	F-23	2
50400-K56-N00ZB	F-23	2
5050A-K56-N00	F-31	1
50512-KAN-961	F-31	2
50522-KM3-000	F-31	3
50524-KBP-901	F-31	4
50530-K56-N00	F-31	5
50606-K56-N00	F-30	2
50619-K56-N00	F-30	3
50650-K56-N00	F-30	4
50660-K56-N00	F-30	5
50661-KYE-900	F-30	6
50670-K56-N00	F-30	7
50700-K56-N00	F-30	25
50705-K56-N00	F-30	26
50711-K15-900	F-30	8
50715-K56-N00	F-30	9
50716-K56-N00	F-30	10
50720-KT7-761	F-30	11
50730-KT7-761	F-30	12
51400-K56-N01	F-11	1
51401-K56-N01	F-11	2
51402-K56-N01	F-11	3
51403-GF4-003	F-11	4
51410-K56-N01	F-11	5
51412-GN5-901	F-11	6
51420-K56-N01	F-11	7
51425-GN5-901	F-11	8
51432-KGH-902	F-11	9
51437-GM0-003	F-11	10
51466-065-901	F-11	11
51470-K56-N01	F-11	12
51490-KWZ-901	F-11	13
51500-K56-N01	F-11	14
51520-K56-N01	F-11	15

Nomor Part	No. Blok	Ref
52101-K56-N00	F-32	6
5210A-K56-N00	F-32	8
52170-K56-N00	F-32	7
52400-K56-N00	F-33	1
52400-K56-N20	F-33	1
53100-K56-N00	F-7	7
53105-K56-N00	F-7	8
53140-K15-900	F-4	9
53150-K56-N00	F-7	9
53166-KYJ-901	F-4	10
53170-KYE-900	F-4	11
53175-KSP-B51	F-5	13
53178-KYE-900	F-4	12
53180-425-010	F-4	13
53192-349-690	F-4	14
53209-GAH-000	F-1	4
5320A-K56-N00	F-9	6
53211-268-011	F-9	3
53212-200-000	F-9	4
53214-200-000	F-9	5
53220-KSP-860	F-9	7
53230-K56-N00ZA	F-7	10
(60000)		
61100-K56-N00FMB	F-10	1
61100-K56-N00RSW	F-10	1
61100-K56-N00SMM	F-10	1
61100-K56-N00WRD	F-10	1
61104-428-000	F-21	15
	F-36-10	11
61200-K56-N00	F-10	2
61302-K56-N00NOR	F-43	5
61302-K56-N00ZB	F-43	2
61302-K56-N00ZC	F-43	2
61302-K56-N00ZD	F-43	2
61302-K56-N00ZE	F-43	2
61303-K56-N00NOR	F-43	10
61303-K56-N00ZB	F-43	3
61303-K56-N00ZC	F-43	3
61303-K56-N00ZD	F-43	3
61303-K56-N00ZE	F-43	3
61304-415-000	F-41	24
61304-K56-N00ZA	F-43	3
61304-K56-N00ZB	F-43	3
61304-K56-N00ZC	F-43	3
61304-K56-N00ZD	F-43	4
6130B-K56-N00	F-43	1
61313-K56-N00	F-43	7
61314-K56-N00	F-43	8
61316-KCJ-661	F-43	9
6131B-K56-N00	F-43	6
6410A-K56-N00	F-24	1
64320-K56-N00FMB	F-24	1
64320-K56-N00RSW	F-24	2
64330-K56-N00	F-24	4

Nomor Part	No. Blok	Ref
64340-K56-N00FMB	F-24	3
64340-K56-N00NOR	F-24	3
64340-K56-N00RSW	F-24	3
64340-K56-N00SMM	F-24	3
64340-K56-N00WRD	F-24	3
64341-K56-N00	F-24	5
64342-K56-N00	F-24	6
64420-K56-N00FMB	F-24	6
64420-K56-N00RSW	F-24	7
64430-K56-N00	F-24	9
64440-K56-N00FMB	F-24	9
64440-K56-N00NOR	F-24	8
64440-K56-N00RSW	F-24	8
64440-K56-N00SMM	F-24	8
64440-K56-N00WRD	F-24	8
6450A-K56-N00	F-24	10
6452A-K56-N00	F-24	11
6455A-K56-N00	F-24	12
64600-K56-N00	F-23-10	2
64601-K56-N00	F-23-10	3
64615-KR1-860	F-24	13
64615-KR1-860	F-43	11
6470A-K56-N00	F-23-10	4
64751-K56-N00	F-23-10	5
64800-K56-N00	F-39	3
(70000)		
75581-GN8-920	F-23	3
77200-K56-N00	F-23	4
77210-K56-N00	F-23	5
77215-KW7-901	F-23	6
77230-K56-N00	F-23	7
77234-K35-V00	F-23	8
77236-GW0-000	F-23	9
77237-K56-N00	F-23	10
(80000)		
8010B-K56-N00	F-34	1
80123-KCC-870	F-39	4
8015A-K56-N00	F-34	2
83545-KCJ-690	F-36-10	12
83551-GE2-000	F-24	14
83551-GE2-000	F-39	5
83610-K56-N00FMB	F-23-10	6
83610-K56-N00RSW	F-23-10	6
83610-K56-N00SMM	F-23-10	6
83610-K56-N00WRD	F-23-10	6
83620-K56-N00FMB	F-23-10	6
83620-K56-N00RSW	F-23-10	7
83620-K56-N00SMM	F-23-10	7
83620-K56-N00WRD	F-23-10	7
83642-171-001	F-48	1
84703-425-001	F-21	16
86150-KYS-940	F-24	15
86531-KYZ-710ZA	F-50	3

Nomor Part	No. Blok	Ref
86531-KYZ-710ZA	F-50-1	3
871X0-K56-N00ZAL	F-50	2
871X0-K56-N00ZAR	F-50	1
871X0-K56-N00ZBL	F-50	1
871X0-K56-N00ZBR	F-50	1
871X0-K56-N00ZCL	F-50	1
871X0-K56-N00ZCR	F-50	1
871X0-K56-N00ZDL	F-50	1
871X0-K56-N00ZDR	F-50	1
871X0-K56-N20ZAL	F-50-1	2
871X1-K56-N20ZAR	F-50-1	1
87503-KVB-930	F-49	1
87505-K56-N00	F-49	2
87506-KPH-880	F-49	3
87509-KWW-A40	F-49	4
87517-K56-N00	F-49	5
87560-KVB-930	F-49	6
87586-KTM-780	F-49	7
88110-K56-N00	F-3	2
88113-KCJ-660	F-3	1
88120-K56-N00	F-3	3
89216-KPP-900	F-48	2
89221-429-000	F-48	3
(90000)		
90001-K56-N00	E-6	10
90004-GHB-661	E-2	10
90004-GHB-671	E-23	13
90005-K56-N00	E-4	8
90008-KT7-001	E-8	11
90010-KM1-001	E-9	6
90017-K56-N00	E-2	11
90019-K56-N00	E-2	12
9001A-KWC-900	E-1	3
90022-MG8-000	E-19	15
90031-K56-N00	E-15	9
90071-MB0-001	E-13	9
90084-041-000	E-17	20
90084-K03-N30	E-10	5
90087-KGH-900	E-10	6
90101-K28-910	F-39	6
90101-KZL-930	F-1	5
90102-MN1-670	F-29	14
90103-KPP-T00	F-33	2
90103-MCS-G00	F-15	16
90105-KGH-901	F-14-40	9
	F-19-40	14
90105-KPH-901	F-23	12
90107-GN1-010	F-31	6
90107-KPP-860	F-7	11
90111-162-000	F-32	9
90111-MR5-000	F-7	12
90113-438-000	F-4	15
90113-KYJ-710	F-27	9
90114-KGH-900	F-5	14

4

INDEKS NOMOR PART

Nomor Part	No. Blok	Ref
90114-KPH-700	F-24	16
90116-KV3-702	F-11	16
90116-KVB-900	F-25	16
	F-37	7
	F-41	25
90116-SP0-004	F-24	17
90120-KCR-003	F-41	26
90123-KW7-901	F-11	17
90128-KET-900	F-30	13
90131-KPH-881	F-12-10	15
90132-K45-N00	F-37	8
90134-K33-D00	F-23-10	8
	F-24	18
90133-K56-N00	F-10	3
90134-KPP-T01	F-24	19
	F-43	12
90140-KZZ-901	F-15	17
90145-GAZ-981	F-5	15
	F-15	18
90164-KZL-A00	F-7	13
90182-K56-N00	F-33	3
90201-KPR-901	F-41	27
90202-KGB-611	E-2	13
90202-KRM-840	E-8	12
90301-K03-N30	F-10	4
90301-K12-900	F-43	13
90302-KBP-900	F-32	10
90302-KGH-900	F-32	11
90304-KGH-901	F-19-40	15
	F-31	7
	F-33	4
90304-KPH-701	F-27	10
90304-KSP-901	F-7	14
90305-GK8-000	F-24	20
	F-37	9
90306-KGH-901	F-19-40	16
90306-KGH-902	F-14-40	10
90310-KWS-900	F-43	14
90321-MR8-001	F-4	16
90401-K56-N00	E-17	21
90401-KPP-900	E-16	11
90401-KTY-D30	E-17	22
90401-KVK-900	E-17	23
90401-KY4-902	E-8	13
90402-K56-N00	E-17	24
90402-KRM-840	E-16	12
90402-KVK-900	E-17	25
90402-KW7-901	E-19	16
90403-KPP-900	E-15	10
90407-259-000	E-15	11
90412-187-001	E-17	26
90412-K56-N00	E-17	27
90418-KYJ-900	E-2	14
90423-KW6-900	E-12	7
90434-K56-N00	E-8	14

Nomor Part	No. Blok	Ref
90435-HB3-000	E-19	17
90439-KWZ-900	E-11	3
90441-KW7-931	E-17	28
90451-K56-N00	E-17	29
90451-KGH-901	E-20	9
90452-KGH-901	E-17	30
90452-KRM-840	E-17	31
90454-KPH-900	E-17	32
90462-KWW-740	E-8	15
90463-ML7-000	E-12	8
90483-K15-900	E-2	15
90501-GR2-000	F-24	21
	F-41	28
90502-K56-N00	F-32	12
90503-KSP-900	F-7	15
90505-KRM-860	F-29	15
90514-K45-N00	F-23-10	13
90521-028-000	F-31	8
90543-MV9-671	E-1	4
90544-283-000	F-11	18
90545-300-000	F-5	16
	F-15	19
90601-KAF-004	F-29	16
90601-KRM-840	E-17	33
90601-PV3-004	F-24	22
90605-KVS-900	E-17	34
90608-072-001	E-12	9
90651-KW7-900	F-11	19
90651-MA5-672	F-5	17
90677-KAN-T00	F-23-10	9
	F-24	23
	F-34	3
	F-43	15
90701-HC4-000	E-15	12
90702-HC4-001	E-6	11
90702-KFM-901	E-10	7
	E-14	4
90702-KRM-840	E-2	16
90741-KFB-001	E-16	13
90741-KGH-900	E-16	14
90753-051-003	F-19-40	17
90753-051-005	F-19-40	17
91001-KPP-901	E-16	15
91003-KPP-931	E-16	16
91004-K56-N01	E-17	35
91005-K56-N01	E-17	36
91006-K56-N01	E-17	37
91006-K56-N02	E-17	37
91007-KE1-003	E-8	16
91008-K56-N01	E-16	17
91009-K31-901	E-19	18
91010-K56-N01	E-17	38
91015-K56-N01	E-19	18
91051-K35-V01	F-19-40	18
91052-K03-N41	F-14-40	11

Nomor Part	No. Blok	Ref
91052-K24-902	F-14-40	11
91052-K24-903	F-14-40	11
91052-K24-904	F-14-40	11
91053-K03-H02	F-19-40	19
91053-K03-N41	F-19-40	19
91202-KSP-911	E-6	12
91204-MC7-003	E-6	13
91205-KF0-003	E-6	14
91205-KF0-005	E-12	10
91209-KWC-901	E-19	19
91212-422-007	F-15	20
91216-KGH-902	E-17	39
91251-KGH-902	F-19-40	20
91251-KPH-881	F-19-40	20
91251-KPH-901	F-14-40	12
91256-166-003	F-11	20
91301-GGL-J02	E-23	14
91301-K56-N00	E-2	17
91301-KV7-671	E-2	18
91306-MG3-001	E-4	9
91307-035-005	E-6	15
91307-PLC-004	E-2	19
91309-425-004	E-13	10
91320-MB0-000	E-13	11
91322-K56-N01	E-6	16
91323-K56-N00	E-10	8
91356-KWV-000	E-10	9
91509-GE2-760	F-23-10	10
	F-24	24
	F-34	4
	F-39	7
	F-43	16
91565-S0X-003	F-37	10
92101-06012-07	F-30	14
92101-06020-4J	F-38	18
92800-12000	E-15	13
92900-08025-0E	E-2	20
92915-10028-0E	F-19-40	21
93301-05012-0J	E-14	5
93600-04012-1G	F-5	18
93891-04010-18	E-23	15
93891-04016-18	E-23	16
93892-05020-07	F-4	17
93893-04012-17	F-5	19
93893-04012-17	F-15	21
93901-24380	F-36-10	13
93903-22520	F-2	6
93903-24310	F-24	25
93903-25210	F-23-10	12
	F-24	26
93903-25480	F-25	17
93903-25581	F-25	18
93904-25210	F-10	5
93913-24220	F-23-10	11
93913-25381	F-2	7

Nomor Part	No. Blok	Ref
94001-03000-0S	F-41	29
94001-06000-0S	F-32	13
94001-06070-0S	F-23	13
94002-08000-0S	F-4	18
	F-15	22
	F-3	4
	F-30	15
94030-08000	F-4	19
94050-0600	F-5	20
	F-21	17
	F-37	11
94050-06000	F-4	20
94050-06081	F-37	12
94050-08000	F-27	11
94050-10001	F-39	8
94050-12001	E-11	4
94101-06000	F-30	16
94103-0570	F-2	8
94103-06000	F-43	17
94103-08000	F-27	12
94103-10001	F-30	17
94103-12000	F-19-40	22
94201-16150	F-30	18
94201-20121	F-29	17
94201-20150	F-15	23
94201-30251	F-31	9
94301-08141	E-2	21
94301-10120	E-2	21
	E-5	3
94510-28000	E-16	18
94520-12000	E-15	14
94520-22000	E-6	17
94540-06018	E-14	6
95002-02100	F-41	30
95002-41050-09	F-41	31
95002-41200-08	F-25	19
95002-50000	F-41	32
95003-23030-31	F-25	20
95005-50180-30	E-6	18
95005-50490-30	F-41	33
95005-55320-20	F-41	34
95014-72302	F-31	10
95015-54002	F-15	24
95015-83000	F-30	19
95701-06010-00	F-23	14
	F-30	20
	F-38	19
	F-39	9
	F-43	18
95701-06010-08	F-34	5
95701-06012-00	F-21	18
	F-23	15
95701-06014-0	E-4	10
	E-13	12
	E-17	40

INDEKS NOMOR PART

Nomor Part	No. Blok	Ref
95701-06014-0	F-38	20
	F-41	35
95701-06016-00	E-19	20
	E-20	10
	F-41	36
95701-06018-01	F-15	25
95701-06018-07	F-38	21
95701-06022-01	E-23	17
	F-21	19
95701-06022-01	F-24	27
	F-41	37
95701-06022-08	F-36-10	14
	F-43	19
95701-06025-00	E-2	22
	F-41	38
95701-06028-0	E-13	13
95701-06035-00	E-14	7
	E-15	15
95701-06065-00	E-15	16
95701-06115-00	E-2	23
95701-08016-01	F-27	13
95701-08020-01	F-30	21
95701-08022-00	F-23	16
95701-08032-00	F-7	16
95701-08035-00	F-9	8
95701-08035-07	F-29	18
95701-08040-01	F-7	17
	F-27	14
95701-08065-00	F-30	22
95701-10030-00	F-30	23
95701-10115-00	F-39	10
96001-06012-01	F-24	28
96001-06012-07	F-5	21
96001-06014-00	E-4	11
	F-15	26
	F-38	22
96001-06016-00	E-11	5
	E-15	17
96001-06018-00	E-15	18
96001-06022-00	E-4	12
	E-12	11
96001-06022-07	F-4	21
	F-5	22
96001-06025-00	E-11	6
	F-41	39
96001-06025-08	F-10	6
96001-06030-00	E-6	19
	E-10	10
96001-06035-00	E-10	11
96001-06040-00	E-6	20
	E-10	12
	E-15	19
96001-06065-00	E-12	12
	E-15	20
96211-08000	F-29	19
	F-30	24

Nomor Part	No. Blok	Ref
96220-30086	E-19	21
96220-40238	E-12	13
	E-14	8
98200-41001	F-37	13
	F-38	23
98200-42000	F-37	14
99001-10140	F-48	4

Nomor Part	No. Blok	Ref

Nomor Part	No. Blok	Ref

4

INDEKS NAMA PART

Nama Part	No. Blok	Ref
(A)		
ADJUSTER ASSY., COMP., CHAIN	F-32	4
ARM ASSY., KICK STARTER	F-29	8
ARM COMP., EX. VALVE ROCKER	E-3	5
ARM COMP., GEAR CHANGE	F-29	3
ARM COMP., IN. VALVE ROCKER	E-3	4
AXLE, FR. WHEEL	F-14-40	3
AXLE, RR. WHEEL	F-19-40	3
(B)		
BAG, OWNERS MANUAL	F-48	1
BALL ASSY., STEEL, #8X18	F-9	1
BALL, STEEL, #8(1/4)	F-29	19
	F-30	24
BAND B1, WIRE	F-38	7
BAND, AIR CLEANER CONNECTING	F-25	11
BAND, TOOL	F-39	4
BAR COMP., SIDE STAND	F-31	5
BAR, L. PILLION STEP	F-30	12
BAR, R. PILLION STEP	F-30	11
BASE COMP., RR. COMBINATION	F-36-10	6
BATTERY(GTZ6V)	F-37	1
BATTERY(YTZ6V)	F-37	1
BEARING, R. RADIAL BALL	E-16	15
BEARING, RADIAL BALL(6201U L)	F-14-40	11
	F-14-40	11
	F-14-40	11
	F-14-40	11
BEARING, RADIAL BALL(6301U L)	F-19-40	19
	F-19-40	19
BEARING, RADIAL BALL, 6201	E-16	16
BEARING, RADIAL BALL, 6201U	E-17	36
BEARING, RADIAL BALL, 6202U	E-17	35
BEARING, RADIAL BALL, 6203 (FK)	E-17	35
	E-17	37
BEARING, RADIAL BALL, 6203UU	F-19-40	18
BEARING, RADIAL BALL, 6204	E-17	38
BEARING, RADIAL BALL, 6301	E-16	17
BEARING, RADIAL BALL, 6903	E-8	16
BEARING, RADIAL BALL, 6905 (NK)	E-19	18
	E-19	18
BODY COMP., FRAME	F-39	1
BODY SET	E-23	8
BOLT, ADJUSTING	F-1	5
BOLT, BRAKE DISK, 8X24	F-14-40	9
	F-19-40	14
BOLT, BREAK OFF	F-7	11
BOLT, CLUTCH WIRE ADJUSTING	F-4	14
BOLT, CYLINDER STUD	E-15	9
BOLT, DRAIN PLUG, 12MM	E-15	13
BOLT, DRIVE SPROCKET FIXING	E-17	20
BOLT, FLANGE, 10X115	F-39	10
BOLT, FLANGE, 10X155	F-39	6
BOLT, FLANGE, 10X30	F-30	23
BOLT, FLANGE, 10X41	F-33	3
BOLT, FLANGE, 10X46	F-33	2
BOLT, FLANGE, 6MM	F-25	16
	F-32	9
	F-37	7
	F-41	25
BOLT, FLANGE, 6X10	F-23	14
	F-30	20
	F-34	5
	F-38	19
	F-39	9
	F-43	18
BOLT, FLANGE, 6X115	E-2	23
BOLT, FLANGE, 6X12	F-5	21
	F-15	16
	F-21	18
	F-23	15
	F-24	28
BOLT, FLANGE, 6X14	E-4	10
	E-4	11
	E-6	10
	E-13	12
	E-17	40
	F-15	26
	F-38	20
	F-38	22
	F-41	35
BOLT, FLANGE, 6X16	E-11	5
	E-15	17
	E-19	20
	E-20	10
	F-41	36
BOLT, FLANGE, 6X18	E-15	18
	F-15	25
	F-38	21
BOLT, FLANGE, 6X20	F-29	14
BOLT, FLANGE, 6X22	E-2	10
	E-4	12
	E-12	11
	E-23	17
	F-4	21
	F-5	22
	F-21	19
	F-24	27
	F-36-10	14
	F-41	37
	F-43	19
BOLT, FLANGE, 6X25	E-2	22
	E-8	11
	E-11	6
	E-23	13
	F-10	6
	F-41	38
BOLT, FLANGE, 6X25	F-41	39
BOLT, FLANGE, 6X28	E-13	13
BOLT, FLANGE, 6X30	E-6	19
BOLT, FLANGE, 6X30	E-10	10
BOLT, FLANGE, 6X32	E-2	11
BOLT, FLANGE, 6X35	E-10	11
	E-14	7
	E-15	15
BOLT, FLANGE, 6X40	E-2	12
	E-6	20
	E-10	12
	E-15	19
BOLT, FLANGE, 6X6	E-4	8
BOLT, FLANGE, 6X65	E-12	12
	E-15	16
	E-15	20
BOLT, FLANGE, 8X16	F-27	13
BOLT, FLANGE, 8X20	F-30	21
BOLT, FLANGE, 8X22	F-23	16
BOLT, FLANGE, 8X32	F-7	16
BOLT, FLANGE, 8X35	F-9	8
	F-29	18
BOLT, FLANGE, 8X40	F-7	17
	F-27	14
BOLT, FLANGE, 8X65	F-30	22
BOLT, FORK	F-11	17
BOLT, HANDLE LEVER PIVOT	F-5	14
BOLT, HEAD COVER	E-1	3
BOLT, HEX., 5X12	E-14	5
BOLT, HEX., 6X12	F-30	14
BOLT, HEX., 6X20	F-38	18
BOLT, L. STEERING HANDLE LEVER	F-4	15
BOLT, OIL, 10X22	F-5	15
	F-15	18
BOLT, PIN	F-12-10	6
BOLT, SEALING, 12MM	E-2	3
BOLT, SEAT HINGE	F-23	12
BOLT, SETTING	E-13	4
BOLT, SOCKET, 5X9	F-7	12
BOLT, SOCKET, 8MM	F-11	16
BOLT, SOCKET, 8X18	E-9	6
BOLT, SOCKET, 8X22	F-30	13
BOLT, STUD, 10X28	F-19-40	21
BOLT, STUD, 8X25	E-2	20
BOLT, SWINGARM PIVOT	F-32	6
BOLT, TORX, 8X25	F-12-10	15
BOLT-WASHER, 6X16	F-41	26
BOOT B	F-12-10	8
	F-17	13
BOOT COMP.	F-5	5
	F-15	3
BOOT, HANDLE LEVER	F-4	13
BOOT, PIN BUSH	F-17	12
	F-12-10	7
BOX COMP., BATTERY	F-37	5
BRACKET SUB ASSY., FR. CALIPER	F-12-10	14
BRACKET SUB ASSY., RR.	F-17	7
BRACKET, NUMBER PLATE	F-43	8

INDEKS NAMA PART

Nama Part	No. Blok	Ref
BRACKET, SEAT	F-39	2
BRIDGE, FORK TOP	F-7	10
BULB, TAILLIGHT(12V 18/5W)	F-36-10	10
BULB, WINKER(12V 10W)(AMBER)	F-1	3
	F-36-10	9
BUSH, 15MM	E-17	3
BUSH, 20MM	E-17	7
	E-17	15
BUSH, SPLINE, 20MM	E-17	10
(C)		
CABLE COMP. A, THROTTLE	F-4	1
CABLE COMP. B, THROTTLE	F-4	2
CABLE COMP., CLUTCH	F-4	3
CABLE, STARTER MOTOR & EARTH	E-13	7
CALIPER SUB ASSY., R. FR.	F-12-10	13
CALIPER SUB ASSY., RR.	F-17	6
CAMSHAFT COMP., EX.	E-3	3
CAMSHAFT COMP., IN.	E-3	2
CAP ASSY., NOISE SUPPRESSOR	F-38	3
CAP ASSY., RESERVE TANK	F-41	14
CAP COMP., RADIATOR	F-41	6
CAP, 14MM	E-10	5
CAP, 30MM	E-10	6
CAP, BLEEDER	F-12-10	4
	F-17	10
CAP, CHANGE SWITCH CONTACT	E-19	13
CAP, DUMMY(4P)(RED)	F-38	8
CAP, FUEL FILLER	F-21	11
CAP, LOCK NUT	F-3	1
CAP, MASTER CYLINDER	F-5	8
	F-15	7
CAP, SWINGARM END	F-32	5
CASE ASSY., UNDER	F-2	5
CASE ASSY., UPPER	F-2	4
CASE COMP., THERMOSTAT	F-41	20
CASE SUB ASSY., AIR CLEANER	F-25	6
CASE, DRIVE CHAIN	F-32	1
CASE, L. FR. BOTTOM	F-11	15
CASE, R. FR. BOTTOM	F-11	7
CATCH COMP., SEAT	F-23	7
CENTER, CLUTCH	E-8	3
CHAIN, CAM(120L)	E-4	1
CHAIN, DRIVE(FSCM428H-118RB)	F-32	2
CHAIN, DRIVE(KMC428HG-118L)	F-32	2
CIRCLIP	F-5	17
	F-15	14
CIRCLIP, 17MM	E-17	33
CIRCLIP, EXTERNAL, 28MM	E-16	18
CIRCLIP, INTERNAL, 12MM	E-15	14
CIRCLIP, INTERNAL, 22MM	E-6	17
CLAMP, MASTER CYLINDER OIL	F-15	8
CLAMP, TUBE(D10.5)	F-41	31
CLAMP, TUBE(D12)	F-25	19
CLAMP, TUBE(D19)	F-25	15

Nama Part	No. Blok	Ref
CLAMP, WATER HOSE	F-41	23
CLAMPER A, BRAKE HOSE	F-15	11
CLAMPER A, FR. BRAKE HOSE	F-5	3
CLAMPER B, FR. BRAKE HOSE	F-5	4
CLIP B, BREATHER TUBE	F-25	1
CLIP, AIR INTAKE DUCT PUSH	F-24	22
CLIP, BUMPER SEAL	F-24	17
CLIP, COUPLER(DARK GREEN)	F-37	10
CLIP, HEADLIGHT	F-1	4
CLIP, KICK STARTER ARM	F-29	7
CLIP, PISTON PIN, 14MM	E-16	5
CLIP, SWITCH COVER	F-29	16
CLIP, TUBE(B10)	F-41	30
CLIP, TUBE(C9)	F-41	32
COIL ASSY., IGNITION	F-38	1
COLLAR, 6.2X11	F-24	21
	F-41	28
COLLAR, FR. AXLE DISTANCE	F-14-40	5
COLLAR, FR. COWL	F-43	14
COLLAR, FR. FENDER	F-21	15
	F-36-10	11
COLLAR, FR. WHEEL SIDE	F-14-40	4
COLLAR, HORN SETTING	F-38	12
COLLAR, KICK SPRING	E-20	8
COLLAR, L. RR. WHEEL SIDE	F-19-40	5
COLLAR, MUFFLER MOUNTING	F-27	7
COLLAR, RADIATOR MOUNTING	F-41	10
COLLAR, RR. AXLE DISTANCE	F-19-40	8
COLLAR, RR. WHEEL SIDE	F-19-40	6
COLLAR, SPLINE, 17X20X11	E-17	13
COLLAR, SPRING	F-11	3
COLLAR, STARTER REDUCTION	E-9	5
COLLAR, WATER PASS, 13X8	E-6	1
CONNECTOR, MASTER CYLINDER	F-15	2
CONTACT ASSY., CHANGE SWITCH	E-15	7
COTTER, VALVE	E-3	13
COUNTERSHAFT	E-17	2
COVER ASSY., BATTERY	F-37	6
COVER ASSY., HEADLIGHT RR.	F-43	6
COVER ASSY., L. SIDE	F-24	12
COVER ASSY., R. SIDE	F-24	10
COVER COMP., L. RR.	E-10	2
COVER COMP., R. CRANKCASE	E-6	2
COVER COMP., WATER PUMP	E-12	3
COVER SUB ASSY., AIR CLEANER	F-25	7
COVER, BATTERY SET	F-24	11
COVER, CHANGE PEDAL	F-29	5
COVER B, CHANGE PEDAL	F-29	20
COVER, CLUTCH SWITCH	F-4	5
COVER, COMBINATION LIGHT	F-23-10	4
COVER, COMBINATION LIGHT UPPER	F-23-10	2
COVER, CYLINDER HEAD	E-1	1
COVER, L. BODY(WL)	F-23-10	7
COVER, L. CRANKCASE	E-10	1
COVER, L. SIDE UPPER(WL)	F-24	8

Nama Part	No. Blok	Ref
COVER, L. UNDER	F-24	9
COVER, R. BODY(WL)	F-23-10	6
COVER, R. SIDE UPPER(WL)	F-24	3
COVER, R. UNDER	F-24	4
COVER, SEAT CATCH	F-23	10
COVER, STARTER MOTOR TERMINAL	E-13	8
COVER, THERMOSTAT	F-41	21
COWL ASSY., FR. CENTER(WL)	F-43	1
COWL, FR. UNDER	F-43	4
COWL, L. FR. SIDE	F-43	3
	F-43	10
COWL, L. SIDE LOWER(WL)	F-24	7
COWL, R. FR. SIDE	F-43	2
	F-43	5
COWL, R. SIDE LOWER(WL)	F-24	2
CRANKCASE COMP., L.	E-15	2
CRANKCASE COMP., R.	E-15	1
CRANKSHAFT COMP.	E-16	1
CUP COMP., OIL	F-15	5
CUSHION ASSY., RR.	F-33	1
CYLINDER COMP.	E-5	1
CYLINDER SET, MASTER	F-5	12
CYLINDER SUB ASSY., FR. BRAKE	F-5	6
CYLINDER SUB ASSY., RR. BRAKE	F-15	4
(D)		
DAMPER, WHEEL	F-19-40	1
DIAPHRAGM	F-5	10
	F-15	12
DISK, CLUTCH FRICTION	E-8	4
DISK, FR. BRAKE	F-14-40	8
DISK, RR. BRAKE	F-19-40	13
DOWEL PIN, 10X12	E-2	21
	E-5	3
DOWEL PIN, 8X12	E-10	7
	E-14	4
	E-15	12
DOWEL PIN, 8X14	E-2	16
DOWEL PIN, 8X16	E-6	11
DRUM, GEARSHIFT	E-19	5
DUCT, INLET	F-25	8
DUST SEAL	F-21	6
DUST SEAL, 21X37X7	F-14-40	12
DUST SEAL, 27X40X4.5(AR)	F-19-40	20
DUST SEAL, 27X40X4.5(NO)	F-19-40	20
DUST SEAL, STEERING HEAD	F-9	5
(E)		
ELEMENT COMP., AIR CLEANER	F-25	2
EMBLEM, PRODUCT	F-24	15
END, STEERING HANDLE	F-7	8
E-RING, 6MM	E-14	6
(F)		
FAN COMP., COOLING	F-41	4

5

INDEKS NAMA PART

Nama Part	No. Blok	Ref
FENDER A, FR.(WL)	F-10	1
FENDER ASSY., A, RR.	F-34	1
FENDER ASSY., B, RR.	F-34	2
FENDER B, FR.	F-10	2
FILTER SET	F-21	3
FLANGE FINAL DRIVEN	F-19-40	23
FLANGE SUB ASSY, DRIVEN	F-19-40	7
FLYWHEEL COMP.	E-11	1
FORK ASSY., L. FR.	F-11	14
FORK ASSY., R. FR.	F-11	1
FORK, CENTER GEARSHIFT	E-19	2
FORK, L. GEARSHIFT	E-19	3
FORK, R. GEARSHIFT	E-19	1
FUEL UNIT	F-21	14
FUSE, MINI(10A)	F-37	13
	F-38	23
FUSE, MINI(20A)	F-37	14
(G)		
GASKET COMP., CYLINDER HEAD	E-1	2
GASKET, CYLINDER	E-5	2
GASKET, CYLINDER HEAD	E-2	4
	E-2	4
GASKET, EX. PIPE	F-27	1
GASKET, L. CRANKCASE COVER	E-10	3
GASKET, R. CRANKCASE COVER	E-6	5
GASKET, TENSIONER LIFTER	E-4	6
GASKET, WATER PUMP	E-12	4
GAUGE, OIL LEVEL	E-6	6
GEAR A, BALANCER DRIVEN(43T)	E-16	7
GEAR A, PRIMARY DRIVE(23T)	E-8	10
GEAR B, BALANCER DRIVEN(43T)	E-16	7
GEAR B, PRIMARY DRIVE(23T)	E-8	10
GEAR C, BALANCER DRIVEN(43T)	E-16	7
GEAR C, PRIMARY DRIVE(23T)	E-8	10
GEAR COMP., STARTER DRIVEN	E-9	1
GEAR, COUNTERSHAFT FIFTH(25T)	E-17	14
GEAR, COUNTERSHAFT FIRST(37T)	E-17	4
GEAR, COUNTERSHAFT FOURTH(27T)	E-17	11
GEAR, COUNTERSHAFT SECOND(33T)	E-17	6
GEAR, COUNTERSHAFT SIXTH(24T)	E-17	17
GEAR, COUNTERSHAFT THIRD(30T)	E-17	9
GEAR, MAINSHAFT FIFTH(24T)	E-17	12
GEAR, MAINSHAFT SECOND(17T)	E-17	5
GEAR, MAINSHAFT SIXTH(26T)	E-17	16
GEAR, MAINSHAFT THIRD & FOURTH	E-17	8
GEAR, OIL PUMP DRIVEN(25T)	E-14	3
GEAR, STARTER REDUCTION	E-9	3
GEAR, WATER PUMP DRIVEN(25T)	E-12	6
GRIP COMP., THROTTLE	F-4	9
GRIP, L. HANDLE	F-4	10
GRIP, RR.	F-23	2
GROMMET, AIR CLEANER CASE	F-24	14
	F-39	5
GUARD, CHANGE SWITCH CORD	E-10	4

Nama Part	No. Blok	Ref
GUARD, NUMBER PLATE	F-43	9
GUARD, R. HEEL	F-30	2
GUIDE A, CAM CHAIN	E-4	7
GUIDE B, CAM CHAIN	E-4	5
GUIDE, CLUTCH OUTER	E-8	2
GUIDE, EX. VALVE(O.S.)	E-2	2
(H)		
HARNESS, WIRE	F-38	6
HEAD ASSY., CYLINDER	E-2	1
HEADLIGHT UNIT	F-1	1
HINGE, SEAT	F-23	5
HOLDER SUB ASSY., ELEMENT	F-25	9
HOLDER, BRUSH	E-13	5
HOLDER, L. MAIN STEP	F-30	5
HOLDER, L. PILLION STEP	F-30	10
HOLDER, MASTER CYLINDER	F-4	8
	F-5	9
HOLDER, R. MAIN STEP	F-30	4
HOLDER, R. PILLION STEP	F-30	9
HORN COMP.(HIGH)	F-38	11
HOSE COMP., FR. BRAKE	F-5	2
HOSE COMP., FUEL FEED	F-21	13
HOSE COMP., RR. BRAKE	F-15	1
HOSE COMP., RR. BRAKE MASTER	F-15	6
HOSE, HEAD OUTLET	F-41	13
HOSE, RADIATOR INLET	F-41	11
HOSE, RADIATOR OUTLET	F-41	12
(I)		
IMPELLER, WATER PUMP	E-12	1
INJECTOR ASSY., FUEL	E-23	10
INSULATOR, IN. PIPE	E-2	6
(J)		
JOINT COMP., INJECTOR	E-23	12
JOINT, BRAKE ROD	F-15	15
JOINT, FR. CUSHION SPRING	F-11	4
JOINT, WATER	E-2	7
(K)		
KEY SET	F-7	1
KEY, WOODRUFF, 4MM	E-16	13
	E-16	14
KICK STARTER ASSY.	E-20	11
(L)		
LABEL, AIR CLEANER ELEMENT NOTICE	F-49	4
LABEL, AIR INTAKE NOTICE	F-49	5
LABEL, COOLANT INFORMATION	F-49	1
LABEL, DRIVE CAUTION	F-49	6
LABEL, FUEL CAUTION	F-49	7
LABEL, RADIATOR CAP	F-41	7
LABEL, TIRE & DRIVE CHAIN	F-49	2

Nama Part	No. Blok	Ref
LENS COMP., TAILLIGHT	F-36-10	8
LENS, L. RR. WINKER	F-36-10	2
LENS, R. RR. WINKER	F-36-10	3
LEVER ASSY, HANDLE	F-4	11
LEVER COMP., CLUTCH	E-6	7
LEVER COMP., L. HANDLE	F-4	12
LEVER, R. STEERING HANDLE	F-5	13
LIFTER ASSY., TENSIONER	E-4	4
LIGHT ASSY., HEAD	F-1	6
LIGHT ASSY., RR. COMBINATION	F-36-10	1
(M)		
MAINSHAFT(12T)	E-17	1
MARK (FI)	F-50	3
	F-50-1	3
MARK, BATTERY CAUTION	F-49	3
METER ASSY., COMBINATION(KPH)	F-2	1
METER COMP., LCD	F-2	2
MIRROR ASSY., L. BACK	F-3	3
MIRROR ASSY., R. BACK	F-3	2
MOTOR ASSY., STARTER	E-13	1
MOTOR COMP., FAN	F-41	5
MUFFLER COMP., EX.	F-27	3
(N)		
NUT, CLIP, 5MM	F-23-10	9
	F-24	23
	F-34	3
	F-43	15
NUT, CLIP, 6MM	F-24	20
	F-37	9
	F-41	27
NUT, FIXING	F-4	16
NUT, FLANGE, 10MM	F-39	8
NUT, FLANGE, 12MM	E-11	4
NUT, FLANGE, 6MM	F-4	20
	F-5	20
	F-21	17
	F-37	11
	F-37	12
NUT, FLANGE, 8MM	E-2	13
	F-27	11
NUT, HEX. CAP, 8MM	F-27	10
NUT, HEX., 10MM	F-3	4
NUT, HEX., 12MM	F-30	15
NUT, HEX., 3MM	F-41	29
NUT, HEX., 6MM	F-23	13
	F-32	13
NUT, HEX., 8MM	F-4	18
	F-4	19
NUT, HEX., 8MM	F-15	22
NUT, PUSH, 6MM	F-43	13
NUT, SPECIAL FLANGE, 12MM	F-32	11
NUT, SPECIAL FLANGE, 14MM	E-8	12
NUT, SPECIAL, 6MM	F-10	4

INDEKS NAMA PART

Nama Part	No. Blok	Ref
NUT, SPECIAL, 6MM	F-32	10
NUT, STEERING STEM	F-7	14
NUT, U, 10MM	F-19-40	15
	F-31	7
	F-33	4
NUT, U, 12MM	F-14-40	10
	F-19-40	16
NUT-WASHER, 6MM	E-13	9
(O)		
OIL PUMP ASSY.	E-14	2
OIL SEAL, 12X18X4	E-6	12
OIL SEAL, 12X20X5	E-6	14
	E-12	10
OIL SEAL, 12X22X7	E-19	19
OIL SEAL, 16X28X7	E-6	13
OIL SEAL, 20X34X7	E-17	39
OIL SEAL, 26X37X6(AR)	F-19-40	17
	F-19-40	17
O-RING	E-23	3
	E-23	4
O-RING(P7)	F-21	2
O-RING, 1.5X9.5	E-4	9
O-RING, 12.8X1.8	E-6	16
O-RING, 13.8X2.4	E-10	8
O-RING, 14.8X1.9	E-2	18
O-RING, 14.8X2.4	F-15	20
O-RING, 16.8X2.4	F-11	20
O-RING, 18X3	E-6	15
O-RING, 24.4X3.1	E-13	10
O-RING, 30MM	E-10	9
O-RING, 40.5X3	F-19-40	10
O-RING, 4X2	E-13	11
O-RING, 6.3X2.2	E-23	14
O-RING, 9.5X1.9	E-2	19
O-RING, FUEL PUMP	F-21	10
O-RING, IN. PIPE	E-2	17
O-RING, THROTTLE BODY	E-23	2
OUTER COMP., CLUTCH(75T)	E-8	1
OUTER COMP., STARTING CLUTCH	E-9	2
(P)		
PACKING A	F-36-10	4
PACKING ASSY., RESERVE TANK	F-41	15
PACKING, DRAIN COCK, 12.5X20	E-15	11
PACKING, FUEL FILLER CAP	F-21	12
PAD SET, FR. BRAKE	F-12-10	2
PAD SET, RR.	F-17	1
PEDAL COMP., RR. BRAKE	F-29	12
PEDAL, GEAR CHANGE	F-29	1
PGM-FI UNIT	F-38	17
PIECE, OIL LOCK	F-11	9
PIN C, PILLION STEP	F-30	19
PIN D, JOINT	F-15	24

Nama Part	No. Blok	Ref
PIN, HANGER	F-12-10	10
	F-17	8
PIN, PISTON	E-16	4
PIN, SHIFT RETURN SPRING	E-19	12
PIN, SPLIT, 1.6X15	F-30	18
PIN, SPLIT, 2.0X12	F-29	17
PIN, SPLIT, 2.0X15	F-15	23
PIN, SPLIT, 3.0X25	F-31	9
PINION, KICK STARTER(22T)	E-20	1
PIPE COMP., FR. FORK	F-11	5
PIPE, IN.	E-2	5
PIPE, L. STEERING HANDLE	F-7	9
PIPE, MAIN STAND PIVOT	F-31	2
PIPE, R. STEERING HANDLE	F-7	7
PIPE, SEAT	F-11	12
PISTON	F-12-10	12
	F-17	3
PISTON SET, MASTER CYLINDER	F-15	9
PISTON(O.S. 0.25)	E-16	3
PISTON(O.S. 0.50)	E-16	3
PISTON(STD.)	E-16	3
PIVOT, SHIFT DRUM STOPPER ARM	E-19	15
PLATE A2, FIXING	E-17	19
PLATE COMP., SHIFT DRUM	E-19	6
PLATE, BEARING HOLDER	E-17	28
PLATE, CLUTCH	E-8	5
PLATE, CLUTCH LIFTER	E-8	7
PLATE, CLUTCH PRESSURE	E-8	6
PLATE, DIAPHRAGM	F-5	11
	F-15	13
PLATE, KICK STOPPER	E-20	2
PLATE, PILLION STEP CLICK	F-30	8
PLATE, R. COVER	E-6	3
PLATE, STEP LOWER	F-30	3
PLATE, TENSIONER SETTING	E-4	3
PLUG, BEARING PUSH	E-15	3
PLUG, BREATHER TUBE	F-25	12
PLUG, PIN	F-17	14
PLUG, SPARK(MR9C-9N)(NG)	E-2	8
PLUG, SPARK(U27EPR-N9)(DS)	E-2	8
PROTECTOR	F-5	7
PROTECTOR, MUFFLER	F-27	5
PUMP ASSY., FUEL	F-21	1
(R)		
RACE, STEERING BOTTOM CONE	F-9	4
RACE, STEERING TOP BALL	F-9	2
RACE, STEERING TOP CONE	F-9	3
RADIATOR COMP.	F-41	1
RATCHET, STARTER DRIVE	E-20	3
RECEIVER, CLUTCH CABLE	E-6	9
RECTIFIER COMP., REGULATOR	F-38	4
RECTIFIER COMP., SILICON	F-38	5
REFLECTOR, RR. REFLEX	F-23-10	1

Nama Part	No. Blok	Ref
RELAY ASSY., POWER (MICRO ISO 4P)	F-38	16
RELAY COMP., WINKER	F-38	14
RESONATOR	F-25	14
RETAINER	F-17	5
RETAINER, FUEL PUMP	F-21	5
RETAINER, VALVE SPRING	E-3	11
RING	E-13	6
RING SET, PISTON(O.S. 0.25)	E-16	2
RING SET, PISTON(O.S. 0.50)	E-16	2
RING SET, PISTON(STD.)	E-16	2
RING, OIL SEAL STOPPER	F-11	11
RING, PISTON	F-11	10
RING, SEAL	E-23	11
RING, SNAP	F-11	19
RING, STOPPER	F-12-10	5
	F-17	11
ROD COMP., PUSH	F-15	10
ROD, CLUTCH LIFTER	E-8	9
ROD, TIE	F-29	4
ROLLER, 3X8.5	E-19	21
ROLLER, 4X23.8	E-12	13
	E-14	8
ROTOR OIL PUMP INNER	E-14	9
ROTOR OIL PUMP OUTER	E-14	10
RUBBER A, TAILLIGHT MOUNTING	F-36-10	5
RUBBER C, SEAT SETTING	F-23	6
RUBBER, BALANCER DUMPER (TT)	E-16	8
	E-16	8
RUBBER, CUSHION	F-21	7
RUBBER, CUSHION COMBINATION LIGHT	F-23-10	5
RUBBER, FUEL TANK CUSHION	F-21	8
RUBBER, GEAR CHANGE PEDAL	F-29	6
RUBBER, HEADLIGHT CASE	F-41	24
RUBBER, HEAT GUARD	F-41	17
RUBBER, LOWER COWL MOUNTING	F-24	13
	F-43	11
RUBBER, MAIN STEP	F-30	6
RUBBER, METER SETTING	F-2	3
RUBBER, MOUNTING	E-1	4
RUBBER, MUFFLER MOUNTING	F-27	6
RUBBER, PROTECTOR MOUNTING	F-27	4
RUBBER, PROTECTOR PACKING	F-27	2
RUBBER, R. COVER	E-6	4
RUBBER, RADIATOR LOWER	F-41	18
RUBBER, RADIATOR MOUNTING	F-41	9
RUBBER, SHOCK(MAGNETIC)	F-37	4
RUBBER, SIDE COVER	F-36-10	12
RUBBER, STAND STOPPER	F-31	4
RUBBER, TAILLIGHT BRACKET	F-38	9
RUBBER, TAILLIGHT CUSHION	F-23-10	3
RUBBER, TAILLIGHT MOUNTING	F-21	16
(S)		
SCREEN, OIL FILTER	E-15	5

5

INDEKS NAMA PART

Nama Part	No. Blok	Ref
SCREW, BLEEDER	F-17	9
SCREW, BLEEDER(NISSIN)	F-12-10	3
SCREW, FLAT, 4X12	F-5	18
SCREW, FLAT, 4X45	F-15	17
SCREW, PAN, 4X8.5	F-41	3
SCREW, PAN, 5X11.5	F-23-10	10
	F-24	24
	F-34	4
	F-39	7
	F-43	16
SCREW, PAN, 5X14	F-24	19
	F-43	12
SCREW, PAN, 6X10	F-23-10	8
	F-24	18
SCREW, PAN, 6X12	F-27	9
SCREW, PAN, 6X14	F-10	3
SCREW, PAN, 6X17	F-37	8
SCREW, SIDE STAND PIVOT	F-31	6
SCREW, SPECIAL, 5X11	F-24	16
SCREW, TAPPING, 3X20	F-2	6
SCREW, TAPPING, 4X12	F-23-10	11
	F-24	25
	F-36-10	13
SCREW, TAPPING, 5X12	F-10	5
	F-23-10	12
	F-24	26
SCREW, TAPPING, 5X14(PO)	F-2	7
SCREW, TAPPING, 5X20	F-25	17
SCREW, TAPPING, 5X25	F-25	18
SCREW, U-LOCK FLAT, 6X12	F-7	13
SCREW-WASHER, 4X10	E-23	15
SCREW-WASHER, 4X12	F-5	19
	F-15	21
SCREW-WASHER, 4X16	E-23	16
SCREW-WASHER, 5X20	F-4	17
SCREW-WASHER, TORX(5X12)	E-23	5
SEAL SET, FR. FORK	F-11	13
SEAL SET, PISTON	F-12-10	1
	F-17	2
SEAL, AIR CLEANER CASE	F-25	5
SEAL, DUST	F-11	8
SEAL, ELEMENT	F-25	3
	F-25	4
SEAL, MECHANICAL	E-12	2
SEAL, VALVE STEM(AR)	E-3	
	E-3	1
SEAT COMP., DOUBLE	F-23	4
SEAT, RATCHET SPRING	E-20	6
SEAT, VALVE SPRING	E-3	12
SENSOR ASSY., BANK ANGLE(M6)	F-38	10
SENSOR ASSY., SPEED	E-15	8
SENSOR ASSY., WATER TEMP	E-2	9
SENSOR SET	E-23	1
SENSOR, OXYGEN	F-27	8

Nama Part	No. Blok	Ref
SET ILLUST, COVER HEAD PIPE	F-24	1
SET RING, 20MM	E-17	34
SET, START MAG	F-37	15
SHAFT ASSY., COUNTER	E-17	42
SHAFT ASSY., MAIN	E-17	41
SHAFT, GEARSHIFT FORK	E-19	4
SHAFT, REDUCTION GEAR	E-9	4
SHAFT, ROCKER ARM	E-3	6
SHAFT, WATER PUMP	E-12	5
SHIM, TAPPET(1.500)	E-3	14
SHIM, TAPPET(1.525)	E-3	14
SHIM, TAPPET(1.550)	E-3	14
SHIM, TAPPET(1.575)	E-3	14
SHIM, TAPPET(1.600)	E-3	14
SHIM, TAPPET(1.625)	E-3	14
SHIM, TAPPET(1.650)	E-3	14
SHIM, TAPPET(1.675)	E-3	14
SHIM, TAPPET(1.700)	E-3	14
SHIM, TAPPET(1.725)	E-3	14
SHIM, TAPPET(1.750)	E-3	14
SHIM, TAPPET(1.775)	E-3	14
SHIM, TAPPET(1.800)	E-3	14
SHIM, TAPPET(1.825)	E-3	14
SHIM, TAPPET(1.850)	E-3	14
SHIM, TAPPET(1.875)	E-3	14
SHIM, TAPPET(1.900)	E-3	14
SHIM, TAPPET(1.925)	E-3	14
SHIM, TAPPET(1.950)	E-3	14
SHIM, TAPPET(1.975)	E-3	14
SHIM, TAPPET(2.000)	E-3	14
SHIM, TAPPET(2.025)	E-3	14
SHIM, TAPPET(2.050)	E-3	14
SHIM, TAPPET(2.075)	E-3	14
SHIM, TAPPET(2.100)	E-3	14
SHIM, TAPPET(2.125)	E-3	14
SHIM, TAPPET(2.150)	E-3	14
SHIM, TAPPET(2.175)	E-3	14
SHIM, TAPPET(2.200)	E-3	14
SHIM, TAPPET(2.225)	E-3	14
SHIM, TAPPET(2.250)	E-3	14
SHIM, TAPPET(2.275)	E-3	14
SHIM, TAPPET(2.300)	E-3	14
SHIM, TAPPET(2.325)	E-3	14
SHIM, TAPPET(2.350)	E-3	14
SHIM, TAPPET(2.375)	E-3	14
SHIM, TAPPET(2.400)	E-3	14
SHIM, TAPPET(2.425)	E-3	14
SHIM, TAPPET(2.450)	E-3	14
SHIM, TAPPET(2.475)	E-3	14
SHIM, TAPPET(2.500)	E-3	14
SHIM, TAPPET(2.525)	E-3	14
SHIM, TAPPET(2.550)	E-3	14
SHIM, TAPPET(2.575)	E-3	14
SHIM, TAPPET(2.600)	E-3	14

Nama Part	No. Blok	Ref
SHIM, TAPPET(2.625)	E-3	14
SHIM, TAPPET(2.650)	E-3	14
SHIM, TAPPET(2.675)	E-3	14
SHIM, TAPPET(2.700)	E-3	14
SHIM, TAPPET(2.725)	E-3	14
SHIM, TAPPET(2.750)	E-3	14
SHIM, TAPPET(2.775)	E-3	14
SHIM, TAPPET(2.800)	E-3	14
SHIM, TAPPET(2.825)	E-3	14
SHIM, TAPPET(2.850)	E-3	14
SHIM, TAPPET(2.875)	E-3	14
SHIM, TAPPET(2.900)	E-3	14
SHROUD COMP.	F-41	2
SLEEVE, RR. WHEEL	F-19-40	4
SLIDER, CHAIN	F-32	7
SOCKET COMP.	F-36-10	7
SOCKET COMP., WINKER LIGHT	F-1	2
SPACER, IGNITION COIL	F-38	2
SPACER, RR. CALIPER	F-32	12
SPANNER, 10X14	F-48	4
SPINDLE COMP., GEARSHIFT	E-19	9
SPINDLE, KICK STARTER	E-20	5
SPRING C, SIDE STAND	F-31	10
SPRING, BALANCER GEAR	E-16	9
SPRING, BEARING PUSH	E-15	4
SPRING, BRAKE PEDAL	F-29	13
SPRING, CARBON BRUSH	E-13	3
SPRING, CHANGE SWITCH CONTACT	E-19	14
SPRING, CLUTCH	E-8	8
SPRING, CLUTCH LEVER	E-6	8
SPRING, FR. FORK	F-11	2
SPRING, GEARSHIFT ARM	E-19	10
SPRING, GEARSHIFT DRUM STOPPER	E-19	8
SPRING, GEARSHIFT RETURN	E-19	11
SPRING, KICK RETURN	E-20	7
SPRING, KICK STARTER	F-29	9
SPRING, KICK STARTER STOPPER	F-30	1
SPRING, LOCK KEY SETTING	F-23	3
SPRING, MAIN STAND	F-31	3
SPRING, PAD	F-12-10	9
	F-17	4
SPRING, RATCHET	E-20	4
SPRING, REBOUND	F-11	6
SPRING, SEAT LOCK	F-23	8
SPRING, STOP SWITCH	F-29	11
SPRING, THRUST	E-16	10
SPRING, VALVE INNER	E-3	10
SPRING, VALVE OUTER	E-3	9
SPROCKET COMP., FINAL DRIVEN(42T)	F-19-40	2
SPROCKET, DRIVE(15T)	E-17	18
STAND ASSY., COMP., MAIN	F-31	1
STATOR COMP.	E-11	2
STAY COMP., CABLE	E-15	6
STAY, COMBINATION SWITCH	F-7	4

INDEKS NAMA PART

Nama Part	No. Blok	Ref
STAY, FR. NUMBER PLATE	F-43	7
STAY, L. UNDER COVER	F-24	6
STAY, R. UNDER COVER	F-24	5
STAY, RADIATOR LOWER	F-41	8
STAY, SEAT HINGE	F-23	1
STAY, WIRE	E-23	6
STEM, STEERING	F-9	6
STEP ASSY., L. PILLION	F-30	26
STEP ASSY., R. PILLION	F-30	25
STEP COMP., CHANGE	F-30	7
STOPPER COMP., GEARSHIFT DRUM	E-19	7
STRIPE SET, L. BLACK	F-50	2
STRIPE SET, L. ORANGE	F-50-1	2
STRIPE SET, L. PINK	F-50	2
STRIPE SET, L. RED	F-50	2
STRIPE SET, L. WHITE	F-50	2
STRIPE SET, R. BLACK	F-50	2
STRIPE SET, R. ORANGE	F-50-1	1
STRIPE SET, R. PINK	F-50	1
STRIPE SET, R. RED	F-50	1
STRIPE SET, R. WHITE	F-50	1
SUB HARNESS, BATTERY	F-37	2
SUSPENSION, RELAY CASE(2P)	F-38	13
SUSPENSION, WINKER RELAY	F-38	15
SWINGARM SUB ASSY., RR.	F-32	8
SWITCH ASSY., FR. STOP	F-5	1
SWITCH ASSY., RR. STOP	F-29	10
SWITCH ASSY., STARTER	F-4	4
SWITCH ASSY., STARTER MAGNETIC	F-37	3
SWITCH ASSY., WINKER	F-4	6
SWITCH COMP., FR. LEVER	F-4	7
(T)		
TANK ASSY., RADIATOR RESERVE	F-41	16
TANK COMP., FUEL	F-21	9
TENSIONER COMP., CAM CHAIN	E-4	2
TERMINAL SET, BRUSH	E-13	2
THERMOSTAT	F-41	19
THREAD COMP., STEERING HEAD	F-9	7
THROTTLE BODY ASSY.(GQ1LA A)	E-23	7
TIRE, FR. (70/90-17M/C 38P)	F-14-40	7
TIRE, RR. (80/90-17M/C 50P)	F-19-40	11
TRAY, FUEL	F-21	4
TRAY, PGM-FI UNIT	F-39	3
TUBE ASSY., BREATHER	F-25	13
TUBE, 5.3X320(95005-55001-10M)	F-41	34
TUBE, 5X180(95005-50001-30M)	E-6	18
TUBE, 5X490(95005-50001-30M)	F-41	33
TUBE, AIR CLEANER CONNECTING	F-25	10
TUBE, BYPASS	F-41	22
TUBE, VINYL, 8X12X300	F-25	20

Nama Part	No. Blok	Ref
(V)		
VALVE SET, IDLE AIR CONTROL	E-23	9
VALVE, EX.	E-3	8
VALVE, IN.	E-3	7
VALVE, RIM	F-14-40	2
	F-19-40	12
(W)		
WASHER, 12.2X17X1.5	E-2	14
WASHER, 12MM	E-12	9
WASHER, 12X24X2.3	E-11	3
WASHER, 14.1MM	E-8	15
WASHER, 15.5X22	F-29	15
WASHER, 17X22	F-31	8
WASHER, 20MM	E-8	14
WASHER, 25X20.2X1	E-17	32
WASHER, 28.1X36X1.8	E-16	12
WASHER, 28.2X45X1.0	E-16	11
WASHER, 3X11X1.0	E-15	10
WASHER, 6.1MM	E-19	17
WASHER, 7X13X1.2	E-12	7
WASHER, 8MM	E-2	15
WASHER, LOCK, 17MM	E-17	21
WASHER, LOCK, 20X19X1.0	E-17	23
WASHER, NYLON, 7MM	F-29	2
WASHER, OIL BOLT	F-5	16
	F-15	19
WASHER, PLAIN, 10MM	F-30	17
WASHER, PLAIN, 12MM	F-19-40	22
WASHER, PLAIN, 17MM	E-8	13
WASHER, PLAIN, 5MM	F-2	8
WASHER, PLAIN, 6MM	F-30	16
	F-43	17
WASHER, PLAIN, 8MM	F-27	12
WASHER, SEALING, 6.5MM	E-12	8
WASHER, SEAT LOCK	F-23	9
WASHER, SPECIAL, 12MM	E-17	30
WASHER, SPECIAL, 14MM	E-20	9
WASHER, SPECIAL, 15MM	E-17	27
WASHER, SPECIAL, 8MM	F-11	18
WASHER, SPLINE, 17MM	E-17	24
WASHER, SPLINE, 17X23X1.6	E-17	31
WASHER, SPLINE, 20MM	E-17	29
WASHER, STEERING STEM	F-7	15
WASHER, THRUST, 15MM	E-17	26
WASHER, THRUST, 17MM	E-17	22
WASHER, THRUST, 20X19X1.0	E-17	25
WASHER, THRUST, 6MM	E-19	16
WASHER, WAVE	F-12-10	11
WEIGHT COMP., BALANCER	E-16	6
WEIGHT, BALANCE(10G)	F-14-40	1
WEIGHT, BALANCE(20G)	F-14-40	1
WEIGHT, BALANCE(30G)	F-14-40	1

Nama Part	No. Blok	Ref
WHEEL SUB ASSY., FR.	F-14-40	6
WHEEL SUB ASSY., RR.	F-19-40	9
WRENCH, HEX., 5MM	F-48	3
WRENCH, SPARK PLUG	F-48	2

5

17 Juni 2016

PARTS CATALOG NEWS

CODE NO.	**18K56GI1**
PARTS CATALOG NEWS	**SONIC 150R (FS150R)** **- TIPE REPSOL (FS150RG)**
NEWS NO.	**008**

(IN-KD) K56

PARTS CATALOG NEWS SONIC 150R FS150RH-2IN,3IN DAN IN

Parts catalog news ini berisi daftar parts Honda SONIC 150R (FS150RH-2IN,3IN dan IN) secara ekslusif dan berdasarkan pada buku parts catalog news Honda SONIC 150R (FS150RG-2IN, IN dan IN).

Komponen yang tidak tercantum dalam Parts Catalog news ini adalah sama seperti Part Catalog SONIC 150R (FS150R).

Nama	Kode area	Tipe	Model	No. Seri Mesin yang berlaku	No. Seri Rangka yang berlaku	No. identifikasi throttle body yang berlaku
SONIC 150R	2IN	Repsol	FS150RH	KB11E0000001~	MH1KB11**GK000001~	GQ1LA A
	3IN	Standard				
	IN					

Tabel warna

- Sewaktu memesan part berwarna, bacalah tabel di bawah dan pakailah nomor part yang terdiri dari nomor part dasar yang bersangkutan kepada mana telah ditambahkan kode warna part.

SONIC 150R (FS150RH)..... 2IN

No.	MODEL		FS150RH				
	WARNA		Nitric orange	Model yang berlaku		No. blok yang berlaku	No. Ref.
	KODE		YR-271	Model pertama yang berlaku	Model akhir yang berlaku		
	Nama parts berwarna	No. dasar part	YR271				
1	BRIDGE, FORK TOP	53230-K56-N00	ZA			F-7	10
2	COVER, COMBINATION LIGHT LOWER	6470A-K56-N00	-			F-23-10	4
3	COVER, L. BODY	83620-K56-N00	RSW			F-23-10	7
4	COVER, L. SIDE UPPER	64440-K56-N00	WOR			F-24	8
5	COVER, R. BODY	83610-K56-N00	RSW			F-23-10	6
6	COVER, R. SIDE UPPER	64340-K56-N00	WOR			F-24	3
7	COWL ASSY., FR. CENTER	6130B-K56-N00	-			F-43	1
8	COWL, L. FR. SIDE	61303-K56-N00	WOR			F-43	10
9	COWL, L. SIDE LOWER	64420-K56-N00	RSW			F-24	7
10	COWL, R. FR. SIDE	61302-K56-N00	WOR			F-43	5
11	COWL, R. SIDE LOWER	64320-K56-N00	RSW			F-24	2
12	COWL, FR. UNDER	61304-K56-N00	ZD			F-43	4
13	FENDER A, FR.	61100-K56-N00	FMB			F-10	1
14	GRIP, RR.	50400-K56-N00	ZA			F-23	2
15	MARK, HONDA	86101-K56-N00	ZA			F-50-1	1
16	MARK, REPSOL	86613-K56-N20	ZA			F-50-1	5
17	STRIPE A, L. BODY COVER	86832-K56-N20	ZA			F-50-1	13
18	STRIPE A, L. SIDE LOWER COWL	86642-K56-N20	ZA			F-50-1	7
19	STRIPE A, R. BODY COVER	86831-K56-N20	ZA			F-50-1	12
20	STRIPE A, R. SIDE LOWER COWL	86641-K56-N20	ZA			F-50-1	6

SONIC 150R (FS150RH)..... 2IN

No.	MODEL		TIPE REPSOL (FS150RH)				
	WARNA		Nitric orange	Model yang berlaku		No. blok yang berlaku	No. Ref.
	KODE		YR-271	Model pertama yang berlaku	Model akhir yang berlaku		
	Nama parts berwarna	No. dasar part	YR271				
21	STRIPE B, L. BODY COVER	86834-K56-N20	ZA			F-50-1	15
22	STRIPE B, L. SIDE LOWER COWL	86644-K56-N20	ZA			F-50-1	9
23	STRIPE B, R. BODY COVER	86833-K56-N20	ZA			F-50-1	14
24	STRIPE B, R. SIDE LOWER COWL	86643-K56-N20	ZA			F-50-1	8
25	STRIPE, L. FR. SIDE COWL	86612-K56-N20	ZA			F-50-1	4
26	STRIPE, L. SIDE UPPER COVER	86646-K56-N20	ZA			F-50-1	11
27	STRIPE, R. FR. SIDE COWL	86611-K56-N20	ZA			F-50-1	3
28	STRIPE, R. SIDE UPPER COVER	86645-K56-N20	ZA			F-50-1	10
29	SWINGARM SUB ASSY., RR.	52200-K56-N00	ZA			F-32	8
30	STRIPE SET, R.	871X0-K56-N20	ZAR			F-50-2	1
31	STRIPE SET, L.	871X0-K56-N20	ZAL			F-50-2	2
32	WHEEL, FR.	44601-K56-N00	ZA			F-14-40	6
33	WHEEL, RR.	42601-K56-N00	ZA			F-19-40	9

SONIC 150R (FS150RH)..... 3IN

No.	MODEL		FS150RH				
	WARNA		Mat gunpowder black metallic	Model yang berlaku		No. blok yang berlaku	No. Ref.
	KODE		NH-436M	Model pertama yang berlaku	Model akhir yang berlaku		
	Nama parts berwarna	No. dasar part	NH436M				
1	BRIDGE, FORK TOP	53230-K56-N00	ZA			F-7	10
2	COVER, COMBINATION LIGHT LOWER	6470A-K56-N00	-			F-23-10	4
3	COVER, L. BODY	83620-K56-N00	MGB			F-23-10	7
4	COVER, L. SIDE UPPER	64440-K56-N00	MGB			F-24	8
5	COVER, R. BODY	83610-K56-N00	MGB			F-23-10	6
6	COVER, R. SIDE UPPER	64340-K56-N00	MGB			F-24	3
7	COWL ASSY., FR. CENTER	6130B-K56-N00	MGB			F-43	1
8	COWL, L. SIDE LOWER	64420-K56-N00	MGB			F-24	7
9	COWL, R. SIDE LOWER	64320-K56-N00	MGB			F-24	2
10	COWL, FR. UNDER	61304-K56-N00	ZF			F-43	4
11	COWL, L. FR. SIDE	61303-K56-N00	ZF			F-43	3
12	COWL, R. FR. SIDE	61302-K56-N00	ZF			F-43	2
13	FENDER A, FR.	61100-K56-N00	ZE			F-10	7
14	GRIP, RR.	50400-K56-N00	ZA			F-23	2
15	MARK, HONDA	86101-K56-N00	ZA			F-50-2	1
16	STRIPE A, L. SIDE UPPER COVER	86644-K56-N70	ZA			F-50-2	9
17	STRIPE A, R. SIDE UPPER COVER	86643-K56-N70	ZA			F-50-2	7
18	STRIPE B, L. SIDE UPPER COVER	86646-K56-N70	ZA			F-50-2	13
19	STRIPE B, R. SIDE UPPER COVER	86645-K56-N70	ZA			F-50-2	11
20	STRIPE, L. BODY COVER	86832-K56-N70	ZA			F-50-2	17

SONIC 150R (FS150RH)..... 3IN

No.	MODEL		FS150RH				
	WARNA		Mat gunpowder black metallic	Model yang berlaku		No. blok yang berlaku	No. Ref.
	KODE		NH-436M	Model pertama yang berlaku	Model akhir yang berlaku		
	Nama parts berwarna	No. dasar part	NH436M				
21	STRIPE, L. SIDE LOWER COWL	86642-K56-N70	ZA			F-50-2	5
22	STRIPE, R. BODY COVER	86831-K56-N70	ZA			F-50-2	15
23	STRIPE, R. SIDE LOWER COWL	86641-K56-N70	ZA			F-50-2	3
24	SWINGARM SUB ASSY., RR.	52200-K56-N00	ZA			F-32	8
25	STRIPE SET, R.	871X0-K56-N70	ZAR			F-50-2	1
26	STRIPE SET, L.	871X0-K56-N70	ZAL			F-50-2	2
27	WHEEL, FR.	42601-K56-N00	ZC			F-14-40	6
28	WHEEL, RR.	42601-K56-N00	ZC			F-19-40	9

SONIC 150R (FS150RH)..... IN

No.	MODEL		FS150RH						
	WARNA		Ross white	Winning red	Space magenta metallic	Model yang berlaku		No. blok yang berlaku	No. Ref.
	KODE		NH-196	R-258	RP-195M	Model pertama yang berlaku	Model akhir yang berlaku		
	Nama parts berwarna	No. dasar part	NH196	R258	RP195				
1	BRIDGE, FORK TOP	53230-K56-N00	ZA	ZA	ZA			F-7	10
2	COVER, COMBINATION LIGHT LOWER	6470A-K56-N00	-	-	-			F-23-10	4
3	COVER, L. BODY	83620-K56-N00	RSW	WRD	SMM			F-23-10	7
4	COVER, L. SIDE UPPER	64440-K56-N00	RSW	WRD	SMM			F-24	8
5	COVER, R. BODY	83610-K56-N00	RSW	WRD	SMM			F-23-10	6
6	COVER, R. SIDE UPPER	64340-K56-N00	RSW	WRD	SMM			F-24	3
7	COWL ASSY., FR. CENTER	6130B-K56-N00	-	-	-			F-43	1
8	COWL, L. SIDE LOWER	64420-K56-N00	FMB	ZB	ZA			F-24	7
9	COWL, R. SIDE LOWER	64320-K56-N00	FMB	RSW	RSW			F-24	2
10	COWL, FR. UNDER	61304-K56-N00	ZE	ZD	ZD			F-43	4
11	COWL, L. FR. SIDE	61303-K56-N00	ZD	ZB	ZC			F-43	3
12	COWL, R. FR. SIDE	61302-K56-N00	ZD	ZB	ZC			F-43	2
13	FENDER A, FR.	61100-K56-N00	RSW	WRD	SMM			F-10	7
14	GRIP, RR.	50400-K56-N00	ZA	ZA	ZA			F-23	2
15	MARK, HONDA	86101-K56-N00	ZA	ZA	ZA			F-50-2	1
16	STRIPE A, L. SIDE UPPER COVER	86644-K56-N50	ZC	ZB	ZA			F-50-2	8
17	STRIPE A, R. SIDE UPPER COVER	86643-K56-N50	ZC	ZB	ZA			F-50-2	6
18	STRIPE B, L. SIDE UPPER COVER	86646-K56-N50	ZC	ZB	ZA			F-50-2	12
19	STRIPE B, R. SIDE UPPER COVER	86645-K56-N50	ZC	ZB	ZA			F-50-2	10
20	STRIPE, L. BODY COVER	86832-K56-N50	ZC	ZB	ZA			F-50-2	16

SONIC 150R (FS150RH)..... IN

No.	MODEL		FS150RH						
	WARNA		Ross white	Winning red	Space magenta metallic	Model yang berlaku		No. blok yang berlaku	No. Ref.
	KODE		NH-196	R-258	RP-195M	Model pertama yang berlaku	Model akhir yang berlaku		
	Nama parts berwarna	No. dasar part	NH196	R258	RP195				
21	STRIPE, L. SIDE LOWER COWL	86642-K56-N50	ZC	ZB	ZA			F-50-2	4
22	STRIPE, R. BODY COVER	86831-K56-N50	ZC	ZB	ZA			F-50-2	14
23	STRIPE, R. SIDE LOWER COWL	86641-K56-N50	ZC	ZB	ZA			F-50-2	2
24	SWINGARM SUB ASSY., RR.	52200-K56-N00	ZA	ZA	ZA			F-32	8
25	STRIPE SET, R.	871X0-K56-N50	ZCR	ZBR	ZAR		F-50-2	1	
26	STRIPE SET, L.	871X0-K56-N50	ZCL	ZBL	ZAL			F-50-2	2
27	WHEEL, FR.	44601-K56-N00	ZB	ZB	ZB			F-14-40	6
28	WHEEL, RR.	42601-K56-N00	ZB	ZB	ZB			F-19-40	9

No. Blok	No. Ref	No. Part	Deskripsi	Jumlah SONIC150R (FS150R) 2015(G)	2016(H)	No. Seri	No. Part asal
E-23	5	16081-KVS-J01	SCREW-WASHER, 5X12(TORX).....	-	1	----------	---------- 2IN,3IN,IN
F-7	18	35121-K56-N00	KEY, BLANK (NOKEYTOP2REPORDER)..	-	(1)	---------	---------- 2IN,3IN,IN

F-10 FRONT FENDER

No. Ref.	L.O.N.	(Nomor ref. relatif) Deskripsi	F.R.T.
1		(7)	
	413103	FENDER A, FRONT.....	0,2

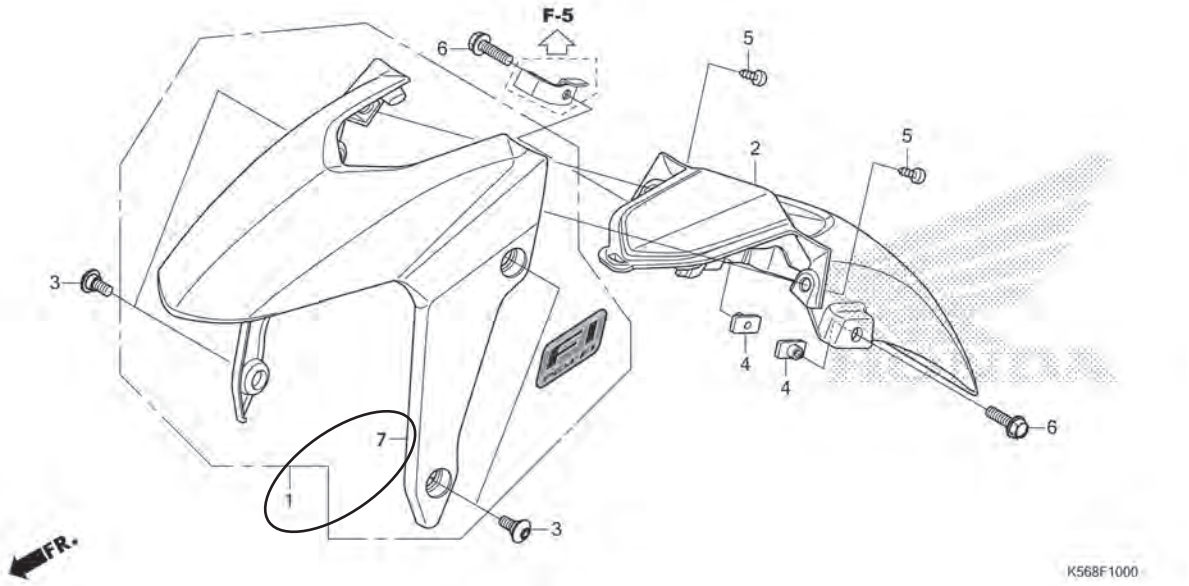

F-10	1	61100-K56-N00FMB	FENDER A, FR.				
			NH1 ..... BLACK	-	1	----------	---------- 2IN
	7	61100-K56-N00RSW	FENDER A, FR.				
			NH196 ..... ROSS WHITE	-	1	----------	---------- IN
		61100-K56-N00SMM	FENDER A, FR.				
			RP195 SPACE MAGENTA METALLIC	-	1	----------	---------- IN
		61100-K56-N00WRD	FENDER A, FR.				
			R258 ..... WINNING RED	-	1	----------	---------- IN
		61100-K56-N00ZE	FENDER A, FR.				
			*NH436*MAT GUNPOWDER BLACK METALLIC	-	1	----------	---------- 3IN

PARTS CATALOG NEWS

No. Blok	No. Ref	No. Part	Deskripsi	Jumlah SONIC150R (FS150R) 2015(G)	2016(H)	No. Seri	No. Part asal	
F-14-40	6	44601-K56-N00ZC	WHEEL COMP, FR.					
			R258 ..... WINNING RED	-	1	----------	----------	3IN
F-19-40	9	42601-K56-N00ZC	WHEEL COMP, RR.					
			R258 ..... WINNING RED	-	1	----------	----------	3IN
F-23	2	50400-K56-N00ZA	GRIP, RR.					
			MAT AXIS GRAY METALLIC	-	1	----------	----------	3IN,IN
F-23-10	6	83610-K56-N00SMM	COVER, R. BODY					
			RP195M SPACE MAGENTA METALLIC	-	1	----------	----------	83600-K56-N00ZB IN
		83610-K56-N00WRD	COVER, R. BODY					
			R258 ..... WINNING RED	-	1	----------	----------	83600-K56-N00ZC IN
		83610-K56-N00RSW	COVER, R. BODY					
			NH196 ..... ROSS WHITE	-	1	----------	----------	83600-K56-N00ZD IN
		83610-K56-N00MGB	COVER, R. BODY					
			*NH436*MAT GUNPOWDER BLACK METALLIC	-	1	----------	----------	3IN
	7	83620-K56-N00SMM	COVER, L. BODY					
			RP195M SPACE MAGENTA METALLIC	-	1	----------	----------	83650-K56-N00ZB IN
		83620-K56-N00WRD	COVER, L. BODY					
			R258 ..... WINNING RED	-	1	----------	----------	83650-K56-N00ZC IN
		83620-K56-N00RSW	COVER, L. BODY					
			NH196 ..... ROSS WHITE	-	1	----------	----------	83650-K56-N00ZD IN
		83620-K56-N00MGB	COVER, L. BODY					
			*NH436*MAT GUNPOWDER BLACK METALLIC	-	1	----------	----------	3IN
F-24	2	64320-K56-N00RSW	COWL, R. SIDE LOWER					
			NH196 ..... ROSS WHITE	-	1	----------	----------	64305-K56-N00ZC IN
		64320-K56-N00FMB	COWL, R. SIDE LOWER					
			NH1 ..... BLACK	-	1	----------	----------	64305-K56-N00ZD IN
		64320-K56-N00MGB	COWL, R. SIDE LOWER					
			*NH436*MAT GUNPOWDER BLACK METALLIC	-	1	----------	----------	3IN

No. Blok	No. Ref	No. Part	Deskripsi	Jumlah SONIC150R (FS150R) 2015(G)	2016(H)	No. Seri	No. Part asal	
F-24	3	64340-K56-N00SMM	COVER, R. SIDE UPPER					
			RP195M SPACE MAGENTA METALLIC	-	1	----------	----------	64310-K56-N00ZB IN
		64340-K56-N00WRD	COVER, R. SIDE UPPER					
			R258 ..... WINNING RED	-	1	----------	----------	64310-K56-N00ZC IN
		64340-K56-N00RSW	COVER, R. SIDE UPPER					
			NH196 ..... ROSS WHITE	-	1	----------	----------	64310-K56-N00ZD IN
		64340-K56-N00MGB	COVER, R. SIDE UPPER					
			*NH436*MAT GUNPOWDER BLACK METALLIC	-	1	----------	----------	3IN
	7	64420-K56-N00RSW	COWL, L. SIDE LOWER					
			NH196 ..... ROSS WHITE	-	1	----------	----------	64405-K56-N00ZC IN
		64420-K56-N00FMB	COWL, L. SIDE LOWER					
			NH1 ..... BLACK	-	1	----------	----------	64405-K56-N00ZD IN
		64420-K56-N00MGB	COWL, L. SIDE LOWER					
			*NH436*MAT GUNPOWDER BLACK METALLIC	-	1	----------	----------	3IN
	8	64440-K56-N00SMM	COVER, L. SIDE UPPER					
			RP195M SPACE MAGENTA METALLIC	-	1	----------	----------	64410-K56-N00ZB IN
		64440-K56-N00WRD	COVER, L. SIDE UPPER					
			R258 ..... WINNING RED	-	1	----------	----------	64410-K56-N00ZC IN
		64440-K56-N00RSW	COVER, L. SIDE UPPER					
			NH196 ..... ROSS WHITE	-	1	----------	----------	64410-K56-N00ZD IN
	8)	64440-K56-N00MGB	COVER, L. SIDE UPPER					
			*NH436*MAT GUNPOWDER BLACK METALLIC	-	1	----------	----------	3IN
F-31	2	50512-KAN-961	PIPE, MAIN STAND PIVOT.....	-	1	----------	----------	50512-KAN-960 2IN,3IN,IN
F-43	2	61302-K56-N00ZF	COWL, R. FR. SIDE					
			*NH436*MAT GUNPOWDER BLACK METALLIC	-	1	----------	----------	3IN
	3	61303-K56-N00ZF	COWL, R. FR. SIDE					
			*NH436*MAT GUNPOWDER BLACK METALLIC	-	1	----------	----------	3IN
	4	61304-K56-N00ZE	COWL, R. FR. SIDE					
			YR271 ..... NITRIC ORANG	-	1	----------	----------	IN
		61304-K56-N00ZF	COWL, R. FR. SIDE					
			*NH436*MAT GUNPOWDER BLACK METALLIC	-	1	----------	----------	IN

F - 50-2

MARK/STRIPE (FS150RH-3IN,IN)

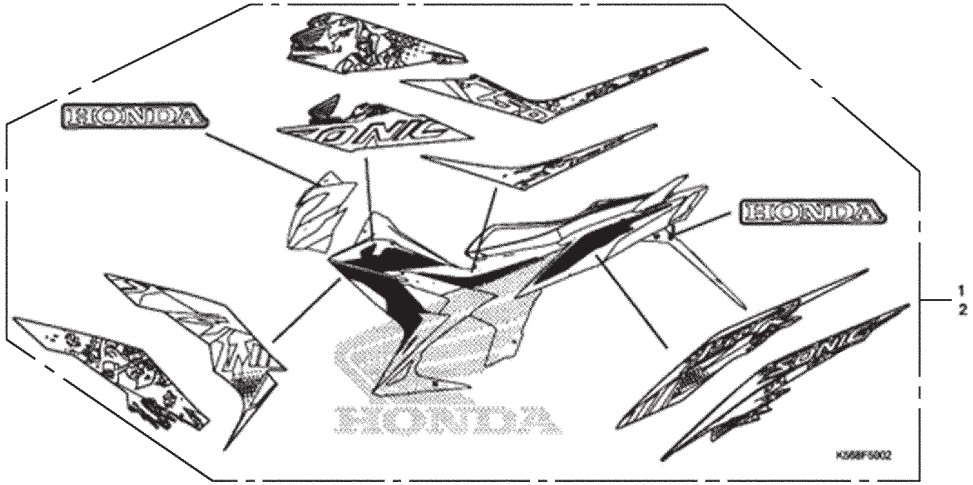

No. Blok	No. Ref	No. Part	Deskripsi	Jumlah SONIC150R (FS150R) 2015(G)	2016(H)	No. Seri	No. Part asal
	1	871X0-K56-N5OZAR	STRIPE SET, R.				
			MAGENTA WHITE	-	1	----------	---------- IN
		871X0-K56-N5OZBR	RED WHITE	-	1	----------	---------- IN
		871X0-K56-N5OZCR	WHITE BLACK	-	1	----------	---------- IN
		871X0-K56-N7OZAR	MAT BLACK	-	1	----------	---------- 3IN
	2	871X0-K56-N5OZAL	STRIPE SET, L.				
			MAGENTA WHITE	-	1	----------	---------- IN
		871X0-K56-N5OZBL	RED WHITE	-	1	----------	---------- IN
		871X0-K56-N5OZCL	WHITE BLACK	-	1	----------	---------- IN
		871X0-K56-N7OZAL	MAT BLACK	-	1	----------	---------- 3IN

PT Astra Honda Motor
TECHNICAL SERVICE DIVISION

Dipublikasikan oleh:
Honda Motor Co., Ltd.

Dicetak di Indonesia
ID.XXX.6320.2016.07.16

14 Agustus 2017

PARTS CATALOG NEWS

CODE NO.	**18K56GI1**
PARTS CATALOG NEWS	**SONIC 150R (FS150R)** **- SONIC 150R (FS150RG)**
NEWS NO.	**014**

(IN-KD)

PARTS MODEL BARU SONIC 150R (FS150RJ-2IN,3IN DAN IN)

Parts catalog news tipe SONIC 150R (FS150RJ-2IN,3IN dan IN) ini secara ekslusif masing-masing berdasarkan pada tipe SONIC 150R (FS150RG-2IN, IN dan IN) yang terdaftar pada Parts Catalog SONIC 150R.

Part-part yang tidak terdaftar dalam Parts Catalog news ini adalah sama seperti tipe SONIC 150R (CB150RG-2IN, 4IN, dan IN).

Nama	Kode area	Tipe	Model	No. Seri Mesin yang berlaku	No. Seri Rangka yang berlaku	No. identifikasi throttle body yang berlaku
SONIC 150R	2IN	Repsol	FS150RH	KB11E1137301	MH1KB1111HK137801	GQ1LA A
	3IN	Standard		KB11E1137401	MH1KB1115HK137901	
	IN			KB11E1137001	MH1KB1110HK137501	

Tabel warna

- Sewaktu memesan part berwarna, bacalah tabel di bawah dan pakailah nomor part yang terdiri dari nomor part dasar yang bersangkutan kepada mana telah ditambahkan kode warna part.

SONIC 150R (FS150RJ) 2IN

No.	MODEL		FS150RJ				
	WARNA		Winning red	Model yang berlaku		No. blok yang berlaku	No. Ref.
	KODE		R-258	Model pertama yang berlaku	Model akhir yang berlaku		
	Nama parts berwarna	No. dasar part	R258				
1	BRIDGE, FORK TOP	53230-K56-N00	ZA			F-7	10
2	COVER ASSY., COMBINATION LIGHT LOWER	6470A-K56-N00	-			F-23-10	4
3	COVER, L. BODY	83620-K56-N00	RSW			F-23-10	7
4	COVER, L. SIDE UPPER	64440-K56-N00	WRD			F-24	8
5	COVER, R. BODY	83610-K56-N00	RSW			F-23-10	6
6	COVER, R. SIDE UPPER	64340-K56-N00	WRD			F-24	3
7	COWL ASSY., FR. CENTER	6130B-K56-N00	-			F-43	1
8	COWL, L. FR. SIDE	61303-K56-N00	ZB			F-43	10
9	COWL, L. SIDE LOWER	64420-K56-N00	WRD			F-24	7
10	COWL, R. FR. SIDE	61302-K56-N00	ZB			F-43	5
11	COWL, R. SIDE LOWER	64320-K56-N00	WRD			F-24	2
12	COWL, FR. UNDER	61304-K56-N00	ZG			F-43	4
13	FENDER A, FR.	61100-K56-N00	RSW			F-10	7
14	GRIP, RR.	50400-K56-N00	ZA			F-23	2
15	STRIPE SET, L.	871X0-K56-NB0	ZAL			F-50-1	1
16	STRIPE SET, R.	871X0-K56-NB0	ZAR			F-50-1	2
17	SWINGARM SUB ASSY., RR.	52200-K56-N00	ZA			F-32	8
18	WHEEL SUB ASSY., FR.	44650-K56-N00	ZC			F-14-40	6
19	WHEEL SUB ASSY., RR.	42650-K56-N00	ZC			F-19-40	9

SONIC 150R (FS150RJ) 3IN

No.	MODEL		FS150RJ				
	WARNA		Mat gunpowder black metallic	Model yang berlaku		No. blok yang berlaku	No. Ref.
	KODE		NH-436M	Model pertama yang berlaku	Model akhir yang berlaku		
	Nama parts berwarna	No. dasar part	NH436M				
1	BRIDGE, FORK TOP	53230-K56-N00	ZA			F-7	10
2	COVER ASSY., COMBINATION LIGHT LOWER	6470A-K56-N00	-			F-23-10	4
3	COVER, L. BODY	83620-K56-N00	MGB			F-23-10	7
4	COVER, L. SIDE UPPER	64440-K56-N00	MGB			F-24	8
5	COVER, R. BODY	83610-K56-N00	MGB			F-23-10	6
6	COVER, R. SIDE UPPER	64340-K56-N00	MGB			F-24	3
7	COWL ASSY., FR. CENTER	6130B-K56-N00	-			F-43	1
8	COWL, L. SIDE LOWER	64420-K56-N00	MGB			F-24	7
9	COWL, R. SIDE LOWER	64320-K56-N00	MGB			F-24	2
10	COWL, FR. UNDER	61304-K56-N00	ZF			F-43	4
11	COWL, L. FR. SIDE	61303-K56-N00	ZB			F-43	3
12	COWL, R. FR. SIDE	61302-K56-N00	ZB			F-43	2
13	FENDER A, FR.	61100-K56-N00	ZE			F-10	7
14	GRIP, RR.	50400-K56-N00	ZA			F-23	2
15	STRIPE SET, L.	871X0-K56-NC0	ZAL			F-50-3	1
16	STRIPE SET, R.	871X0-K56-NC0	ZAR			F-50-3	2
17	SWINGARM SUB ASSY., RR.	52200-K56-N00	ZA			F-32	8
18	WHEEL SUB ASSY., FR.	44650-K56-N00	ZC			F-14-40	6
19	WHEEL SUB ASSY., RR.	42650-K56-N00	ZC			F-19-40	9

SONIC 150R (FS150RJ) ..... IN

No.	MODEL		FS150RJ					
	WARNA		Black	Winning red	Model yang berlaku		No. blok yang berlaku	No. Ref.
	KODE		NH-1	R-258	Model pertama yang berlaku	Model akhir yang berlaku		
	Nama parts berwarna	No. dasar part	NH1	R258				
1	BRIDGE, FORK TOP	53230-K56-N00	ZA	ZA			F-7	10
2	COVER ASSY., COMBINATION LIGHT LOWER	6470A-K56-N00	-	-			F-23-10	4
3	COVER, L. BODY	83620-K56-N00	FMB	FMB			F-23-10	7
4	COVER, L. SIDE UPPER	64440-K56-N00	FMB	WRD			F-24	8
5	COVER, R. BODY	83610-K56-N00	FMB	FMB			F-23-10	6
6	COVER, R. SIDE UPPER	64340-K56-N00	FMB	WRD			F-24	3
7	COWL ASSY., FR. CENTER	6130B-K56-N00	-	-			F-43	1
8	COWL, L. SIDE LOWER	64420-K56-N00	FMB	RSW			F-24	7
9	COWL, R. SIDE LOWER	64320-K56-N00	FMB	RSW			F-24	2
10	COWL, FR. UNDER	61304-K56-N00	ABM	ZA			F-43	4
11	COWL, L. FR. SIDE	61303-K56-N00	ZE	ZE			F-43	3
12	COWL, R. FR. SIDE	61302-K56-N00	ZE	ZE			F-43	2
13	FENDER A, FR.	61100-K56-N00	FMB	WRD			F-10	7
14	GRIP, RR.	50400-K56-N00	ZA	ZA			F-23	2
15	STRIPE SET, L.	871X0-K56-NA0	ZAL	ZBL			F-50-3	1
16	STRIPE SET, R.	871X0-K56-NA0	ZAR	ZBR			F-50-3	2
17	SWINGARM SUB ASSY., RR.	52200-K56-N00	ZA	ZA			F-32	8
18	WHEEL SUB ASSY., FR.	44650-K56-N00	ZB	ZB			F-14-40	6
19	WHEEL SUB ASSY., RR.	42650-K56-N00	ZB	ZB			F-19-40	9

PARTS CATALOG NEWS

No. Blok	No. Ref	No. Part	Deskripsi	Jumlah SONIC 150R (FS150R) G	H	J	No. Part asal	Parts Catalog
E-1	1	12311-K56-N00	COVER, CYLINDER HEAD.....	-	-	1	12311-K56-N20	2IN
E-4	4	14520-KRE-G01	LIFTER ASSY., TENSIONER.....	-	-	1	14520-KPP-T01	2IN,3IN,IN
E-6	2	11330-K56-N00	COVER COMP., R. CRANKCASE.....	-	-	1	11330-K56-N20	2IN
E-10	1	11341-K56-N00	COVER, L. CRANKCASE.....	-	-	1	11341-K56-N20	2IN
E-12	3	19220-K56-N00	COVER COMP., WATER PUMP.....	-	-	1	19220-K56-N20	2IN
E-23	5	16081-KVS-J01	SCREW-WASHER, 5X12(TORX).....	-	-	1	16081-K56-N01	2IN,3IN,IN
F-7	5	35110-K56-N02	SHUTTER, KEY.....	-	-	1	35110-K56-N01	2IN,3IN,IN
F-10	1		FENDER SET A, FR.(WL)				61000-K56-N00ZA	
			TYPE4.....	-	-	0		3IN,IN
			FENDER SET A, FR.(WL)				61000-K56-N00ZB	
			TYPE3.....	-	-	0		3IN,IN
			FENDER SET A, FR.(WL)				61000-K56-N00ZC	
			TYPE2.....	-	-	0		3IN,IN
			FENDER SET A, FR.(WL)				61000-K56-N00ZD	
			TYPE1.....	-	-	0		3IN,IN
			FENDER SET A, FR.(WL)				61000-K56-N20ZA	
			TYPE1.....	-	-	0		2IN
	7	61100-K56-N00FMB	FENDER A, FR.					
			NH1.....BLACK	-	-	1		IN
		61100-K56-N00RSW	FENDER A, FR.					
			NH196.....ROSS WHITE	-	-	1		2IN
		61100-K56-N00WRD	FENDER A, FR.					
			R258.....WINNING RED	-	-	1		IN
		61100-K56-N00ZE	FENDER A, FR.					
			NH436M					
			MAT GUNPOWDER BLACK METALLIC	-	-	1		3IN
F-14-40	6	44650-K56-N00ZC	WHEEL SUB ASSY., FR.					
			R258.....WINNING RED	-	-	1		2IN,3IN
			WHEEL SUB ASSY., FR.				44650-K56-N00ZA	
			YR271.....NITRIC ORANGE	-	-	0		2IN

No. Blok	No. Ref	No. Part	Deskripsi	Jumlah SONIC 150R (FS150R) G	H	J	No. Part asal	Parts Catalog
	(6)	44650-K56-N00ZC	WHEEL SUB ASSY., FR.				44650-K56-N00ZB	
			NH303M ....MAT AXIS GRAY METALLIC	-	-	0		3IN
F-19-40	9	42650-K56-N00ZC	WHEEL SUB ASSY., RR.					
			R258 .....WINNING RED	-	-	1		2IN,3IN
			WHEEL SUB ASSY., RR.				42650-K56-N00ZA	
			YR271 .....NITRIC ORANGE	-	-	0		2IN
			WHEEL SUB ASSY., RR.				42650-K56-N00ZB	
			NH303M ....MAT AXIS GRAY METALLIC	-	-	0		3IN
F-23	2	50400-K56-N00ZA	GRIP, RR.					
			NH303M ....MAT AXIS GRAY METALLIC	-	-	1		3IN,IN
			GRIP, RR.				50400-K56-N00ZB	
			NH255M ...SHIMMER SILVER METALLIC	-	-	0		3IN,IN
F-23-10	6	83610-K56-N00FMB	COVER, R. BODY(WL)				83600-K56-N00ZC	
			TYPE2	-	-	1		IN
		83610-K56-N00FMB	COVER, R. BODY(WL)				83600-K56-N00ZD	
			TYPE1	-	-	1		IN
		83610-K56-N00RSW	COVER, R. BODY(WL)					
			NH196 .....ROSS WHITE	-	-	1		2IN
		83610-K56-N00MGB	COVER, R. BODY(WL)					
			NH436M					
			MAT GUNPOWDER BLACK METALLIC	-	-	1		3IN
			COVER SET, R. BODY(WL)				83600-K56-N00ZA	
			TYPE4	-	-	0		3IN,IN
			COVER SET, R. BODY(WL)				83600-K56-N00ZB	
			TYPE3	-	-	0		3IN,IN
			COVER SET, R. BODY(WL)				83600-K56-N00ZC	
			TYPE2	-	-	0		3IN
			COVER SET, R. BODY(WL)				83600-K56-N00ZD	
			TYPE1	-	-	0		3IN
			COVER SET, R. BODY(WL)				83600-K56-N20ZA	
			TYPE1	-	-	0		2IN
	7	83620-K56-N00FMB	COVER, L. BODY(WL)				83650-K56-N00ZC	
			TYPE2	-	-	1		IN
		83620-K56-N00FMB	COVER, L. BODY(WL)				83650-K56-N00ZD	
			TYPE1	-	-	1		IN

No. Blok	No. Ref	No. Part	Deskripsi	Jumlah SONIC 150R (FS150R) G	H	J	No. Part asal	Parts Catalog
	(7)	83620-K56-N00RSW	COVER, L. BODY(WL)					
			NH196 .....ROSS WHITE	-	-	1		2IN
		83620-K56-N00MGB	COVER, L. BODY(WL)					
			NH436M					
			MAT GUNPOWDER BLACK METALLIC	-	-	1		3IN
			COVER SET, L. BODY(WL)				83650-K56-N00ZA	
			TYPE4	-	-	0		3IN,IN
			COVER SET, L. BODY(WL)				83650-K56-N00ZB	
			TYPE3	-	-	0		3IN,IN
			COVER SET, L. BODY(WL)				83650-K56-N00ZC	
			TYPE2	-	-	0		3IN
			COVER SET, L. BODY(WL)				83650-K56-N00ZD	
			TYPE1	-	-	0		3IN
			COVER SET, L. BODY(WL)				83650-K56-N20ZA	
			TYPE1	-	-	0		2IN
F-24	2	64320-K56-N00RSW	COWL, R. SIDE LOWER(WL)				64305-K56-N00ZC	
			TYPE2	-	-	1		IN
		64320-K56-N00FMB	COWL, R. SIDE LOWER(WL)				64305-K56-N00ZD	
			TYPE1	-	-	1		IN
		64320-K56-N00WRD	COWL, R. SIDE LOWER(WL)					
			R258 .....WINNING RED	-	-	1		2IN
		64320-K56-N00MGB	COWL, R. SIDE LOWER(WL)					
			NH436M					
			MAT GUNPOWDER BLACK METALLIC	-	-	1		3IN
			COWL SET, R. SIDE LOWER(WL)				64305-K56-N00ZA	
			TYPE4	-	-	0		3IN,IN
			COWL SET, R. SIDE LOWER(WL)				64305-K56-N00ZB	
			TYPE3	-	-	0		3IN,IN
			COWL SET, R. SIDE LOWER(WL)				64305-K56-N00ZC	
			TYPE2	-	-	0		3IN
			COWL SET, R. SIDE LOWER(WL)				64305-K56-N00ZD	
			TYPE1	-	-	0		3IN
			COWL SET, R. SIDE LOWER(WL)				64305-K56-N20ZA	
			TYPE1	-	-	0		2IN
	3	64340-K56-N00WRD	COVER, R. SIDE UPPER(WL)				64310-K56-N00ZC	
			TYPE2	-	-	1		IN

No. Blok	No. Ref	No. Part	Deskripsi	Jumlah SONIC 150R (FS150R) G	H	J	No. Part asal	Parts Catalog
	(3)	64340-K56-N00FMB	COVER, R. SIDE UPPER(WL)				64310-K56-N00ZD	
			TYPE1	-	-	1		IN
		64340-K56-N00WRD	COVER, R. SIDE UPPER(WL)					
			R258 .....WINNING RED	-	-	1		2IN
		64340-K56-N00MGB	COVER, R. SIDE UPPER(WL)					
			NH436M					
			MAT GUNPOWDER BLACK METALLIC	-	-	1		3IN
			COVER SET, R. SIDE UPPER(WL)				64310-K56-N00ZA	
			TYPE4	-	-	0		3IN,IN
			COVER SET, R. SIDE UPPER(WL)				64310-K56-N00ZB	
			TYPE3	-	-	0		3IN,IN
			COVER SET, R. SIDE UPPER(WL)				64310-K56-N00ZC	
			TYPE2	-	-	0		3IN
			COVER SET, R. SIDE UPPER(WL)				64310-K56-N00ZD	
			TYPE1	-	-	0		3IN
			COVER SET, R. SIDE UPPER(WL)				64310-K56-N20ZA	
			TYPE1	-	-	0		2IN
	7	64420-K56-N00RSW	COWL, L. SIDE LOWER(WL)				64405-K56-N00ZC	
			TYPE2	-	-	1		IN
		64420-K56-N00FMB	COWL, L. SIDE LOWER(WL)				64405-K56-N00ZD	
			TYPE1	-	-	1		IN
		64420-K56-N00WRD	COWL, L. SIDE LOWER(WL)					
			R258 .....WINNING RED	-	-	1		2IN
		64420-K56-N00MGB	COWL, L. SIDE LOWER(WL)					
			NH436M					
			MAT GUNPOWDER BLACK METALLIC	-	-	1		3IN
			COWL SET, L. SIDE LOWER(WL)				64405-K56-N00ZA	
			TYPE4	-	-	0		3IN,IN
			COWL SET, L. SIDE LOWER(WL)				64405-K56-N00ZB	
			TYPE3	-	-	0		3IN,IN
			COWL SET, L. SIDE LOWER(WL)				64405-K56-N00ZC	
			TYPE2	-	-	0		3IN
			COWL SET, L. SIDE LOWER(WL)				64405-K56-N00ZD	
			TYPE1	-	-	0		3IN
			COWL SET, L. SIDE LOWER(WL)				64405-K56-N20ZA	
			TYPE1	-	-	0		2IN

No. Blok	No. Ref	No. Part	Deskripsi	Jumlah SONIC 150R (FS150R) G	H	J	No. Part asal	Parts Catalog
	8	64440-K56-N00WRD	COVER, L. SIDE UPPER(WL)				64410-K56-N00ZC	
			TYPE2	-	-	1	IN	
		64440-K56-N00FMB	COVER, L. SIDE UPPER(WL)				64410-K56-N00ZD	
			TYPE1	-	-	1	IN	
		64440-K56-N00WRD	COVER, L. SIDE UPPER(WL)					
			R258 .....WINNING RED	-	-	1		2IN
		64440-K56-N00MGB	COVER, L. SIDE UPPER(WL)					
			NH436M					
			MAT GUNPOWDER BLACK METALLIC	-	-	1		3IN
			COVER SET, L. SIDE UPPER(WL)				64410-K56-N00ZA	
			TYPE4	-	-	0		3IN,IN
			COVER SET, L. SIDE UPPER(WL)				64410-K56-N00ZB	
			TYPE3	-	-	0		3IN,IN
			COVER SET, L. SIDE UPPER(WL)				64410-K56-N00ZC	
			TYPE2	-	-	0		3IN
			COVER SET, L. SIDE UPPER(WL)				64410-K56-N00ZD	
			TYPE1	-	-	0		3IN
			COVER SET, L. SIDE UPPER(WL)				64410-K56-N20ZA	
			TYPE1	-	-	0		2IN
F-31	2	50512-KAN-961	PIPE, MAIN STAND PIVOT	-	-	1	50512-KAN-960	2IN,3IN,IN
	6	90107-KBA-900	SCREW, SIDE STAND PIVOT	-	-	1	90107-GN1-010	2IN,3IN,IN
F-43	2	61302-K56-N00ZE	COWL, R. FR. SIDE					
			NH1 .....BLACK	-	-	1		IN
			COWL, R. FR. SIDE				61302-K56-N00ZC	
			RP195M ....SPACE MAGENTA METALLIC	-	-	0		3IN,IN
			COWL, R. FR. SIDE				61302-K56-N00ZD	
			NH196 .....ROSS WHITE	-	-	0		3IN,IN
			COWL, R. FR. SIDE				61302-K56-N00ZE	
			NH1 .....BLACK	-	-	0		3IN
	3	61303-K56-N00ZE	COWL, L. FR. SIDE					
			NH1 .....BLACK	-	-	1		IN
			COWL, L. FR. SIDE				61303-K56-N00ZC	
			RP195M ....SPACE MAGENTA METALLIC	-	-	0		3IN,IN
			COWL, L. FR. SIDE				61303-K56-N00ZD	
			NH196 .....ROSS WHITE	-	-	0		3IN,IN

No. Blok	No. Ref	No. Part	Deskripsi	Jumlah SONIC 150R (FS150R) G	H	J	No. Part asal	Parts Catalog
	(3)		COWL, L. FR. SIDE				61303-K56-N00ZE	
			NH1 .....BLACK	-	-	0		3IN
	4	61304-K56-N00ZF	COWL, FR. UNDER					
			NH436M					
			MAT GUNPOWDER BLACK METALLIC	-	-	1		3IN
		61304-K56-N00ZG	COWL, FR. UNDER					
			NH1 .....BLACK	-	-	1		2IN
		61304-K56-N00ABM	COWL, FR. UNDER					
			NHB12M ...AFFINITY BLACK METALLIC	-	-	1		IN
		61304-K56-N00ZA	COWL, FR. UNDER					
			R258 .....WINNING RED	-	-	1		3IN,IN
			COWL, FR. UNDER				61304-K56-N00ZB	
			RP195M ....SPACE MAGENTA METALLIC	-	-	0		3IN,IN
			COWL, FR. UNDER				61304-K56-N00ZC	
			NH255M ...SHIMMER SILVER METALLIC	-	-	0		3IN,IN
			COWL, FR. UNDER				61304-K56-N00ZD	
			NH196 .....ROSS WHITE	-	-	0		2IN,3IN,IN
	5	61302-K56-N00ZB	COWL, R. FR. SIDE(WL)					
			R258 .....WINNING RED	-	-	1		2IN
			COWL SET, R. FR. SIDE(WL)				61305-K56-N20ZA	
			TYPE1	-	-	0		2IN
	10	61303-K56-N00ZB	COWL, L. FR. SIDE(WL)					
			R258 .....WINNING RED	-	-	1		2IN
			COWL SET, L. FR. SIDE(WL)				61355-K56-N20ZA	
			TYPE1	-	-	0		2IN
F-50	1		MARK, HONDA(55MM)				86101-K56-N00ZA	
			TYPE1	-	-	0		3IN,IN
	2		MARK(FI)				86531-KYZ-710ZA	
			TYPE1	-	-	0		3IN,IN
	3		STRIPE, R. SIDE LOWER COWL				86641-K56-N00ZA	
			TYPE4	-	-	0		3IN,IN
			STRIPE, R. SIDE LOWER COWL				86641-K56-N00ZB	
			TYPE3	-	-	0		3IN,IN
			STRIPE, R. SIDE LOWER COWL				86641-K56-N00ZC	
			TYPE2	-	-	0		3IN,IN
			STRIPE, R. SIDE LOWER COWL				86641-K56-N00ZD	
			TYPE1	-	-	0		3IN,IN

No. Blok	No. Ref	No. Part	Deskripsi	Jumlah SONIC 150R (FS150R) G	H	J	No. Part asal	Parts Catalog
	4		STRIPE, L. SIDE LOWER COWL				86642-K56-N00ZA	
			TYPE4	-	-	0		3IN,IN
			STRIPE, L. SIDE LOWER COWL				86642-K56-N00ZB	
			TYPE3	-	-	0		3IN,IN
			STRIPE, L. SIDE LOWER COWL				86642-K56-N00ZC	
			TYPE2	-	-	0		3IN,IN
			STRIPE, L. SIDE LOWER COWL				86642-K56-N00ZD	
			TYPE1	-	-	0		3IN,IN
	5		STRIPE A, R. SIDE UPPER COVER				86643-K56-N00ZA	
			TYPE4	-	-	0		3IN,IN
			STRIPE A, R. SIDE UPPER COVER				86643-K56-N00ZB	
			TYPE3	-	-	0		3IN,IN
			STRIPE A, R. SIDE UPPER COVER				86643-K56-N00ZC	
			TYPE2	-	-	0		3IN,IN
			STRIPE A, R. SIDE UPPER COVER				86643-K56-N00ZD	
			TYPE1	-	-	0		3IN,IN
	6		STRIPE A, L. SIDE UPPER COVER				86644-K56-N00ZA	
			TYPE4	-	-	0		3IN,IN
			STRIPE A, L. SIDE UPPER COVER				86644-K56-N00ZB	
			TYPE3	-	-	0		3IN,IN
			STRIPE A, L. SIDE UPPER COVER				86644-K56-N00ZC	
			TYPE2	-	-	0		3IN,IN
			STRIPE A, L. SIDE UPPER COVER				86644-K56-N00ZD	
			TYPE1	-	-	0		3IN,IN
	7		STRIPE B, R. SIDE UPPER COVER				86645-K56-N00ZA	
			TYPE4	-	-	0		3IN,IN
			STRIPE B, R. SIDE UPPER COVER				86645-K56-N00ZB	
			TYPE3	-	-	0		3IN,IN
			STRIPE B, R. SIDE UPPER COVER				86645-K56-N00ZC	
			TYPE2	-	-	0		3IN,IN
			STRIPE B, R. SIDE UPPER COVER				86645-K56-N00ZD	
			TYPE1	-	-	0		3IN,IN
	8		STRIPE B, L. SIDE UPPER COVER				86646-K56-N00ZA	
			TYPE4	-	-	0		3IN,IN
			STRIPE B, L. SIDE UPPER COVER				86646-K56-N00ZB	
			TYPE3	-	-	0		3IN,IN
			STRIPE B, L. SIDE UPPER COVER				86646-K56-N00ZC	
			TYPE2	-	-	0		3IN,IN
			STRIPE B, L. SIDE UPPER COVER				86646-K56-N00ZD	
			TYPE1	-	-	0		3IN,IN

No. Blok	No. Ref	No. Part	Deskripsi	Jumlah SONIC 150R (FS150R) G	H	J	No. Part asal	Parts Catalog
	9		STRIPE, R. BODY COVER				86831-K56-N00ZA	
			TYPE4	-	-	0		3IN,IN
			STRIPE, R. BODY COVER				86831-K56-N00ZB	
			TYPE3	-	-	0		3IN,IN
			STRIPE, R. BODY COVER				86831-K56-N00ZC	
			TYPE2	-	-	0		3IN,IN
			STRIPE, R. BODY COVER				86831-K56-N00ZD	
			TYPE1	-	-	0		3IN,IN
	10		STRIPE, L. BODY COVER				86832-K56-N00ZA	
			TYPE4	-	-	0		3IN,IN
			STRIPE, L. BODY COVER				86832-K56-N00ZB	
			TYPE3	-	-	0		3IN,IN
			STRIPE, L. BODY COVER				86832-K56-N00ZC	
			TYPE2	-	-	0		3IN,IN
			STRIPE, L. BODY COVER				86832-K56-N00ZD	
			TYPE1	-	-	0		3IN,IN

F-50-1 MARK/STRIPE(FS150R-2IN)

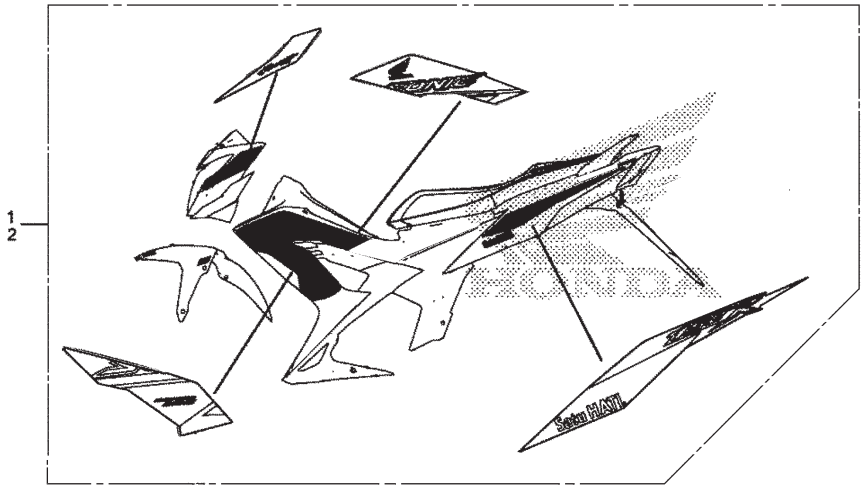

F-50-1	1	871X0-K56-NB0ZAL	STRIPE SET, L.					
			WINNING RED	-	-	1		2IN
	2	871X0-K56-NB0ZAR	STRIPE SET, R.					
			WINNING RED	-	-	1		2IN

F - 50-3

MARK/STRIPE (FS150RJ-3IN,IN)

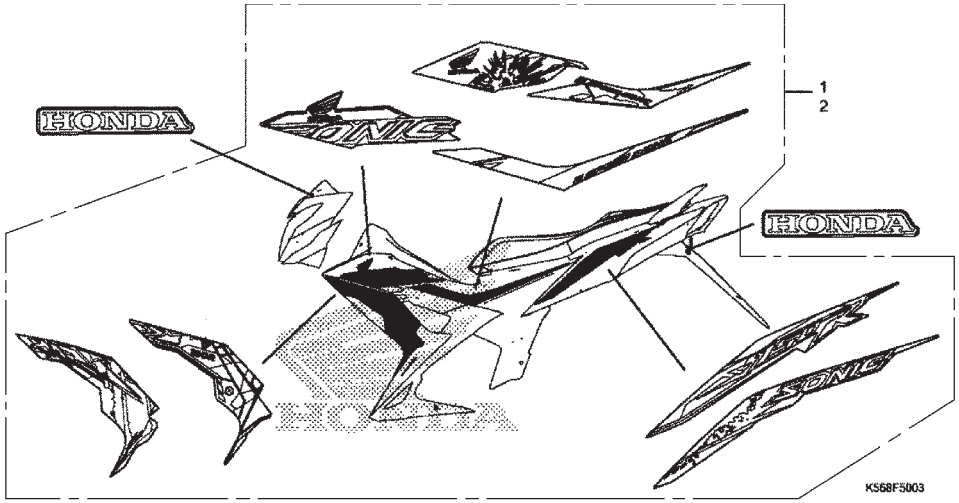

No. Blok	No. Ref	No. Part	Deskripsi	Jumlah SONIC 150R (FS150R) G	H	J	No. Part asal	Parts Catalog
F-50-3	1	871X0-K56-NA0ZAL	STRIPE SET, L.					
			BLACK	-	-	1		IN
		871X0-K56-NA0ZBL	RED	-	-	1		IN
		871X0-K56-NC0ZAL	MAT BLACK	-	-	1		3IN
	2	871X0-K56-NA0ZAR	STRIPE SET, R.					
			BLACK	-	-	1		IN
		871X0-K56-NA0ZBR	RED	-	-	1		IN
		871X0-K56-NC0ZAR	MAT BLACK	-	-	1		3IN

PT Astra Honda Motor
TECHNICAL SERVICE DIVISION

Dipublikasikan oleh:
Honda Motor Co., Ltd.

Dicetak di Indonesia
ID.XXX.XXXX.2017.10.17

9 Juli 2018

PARTS CATALOG NEWS

CODE NO.	18K56GI1
PARTS CATALOG NEWS	SONIC 150R (FS150R) - SONIC 150R (FS150RG)
NEWS NO.	019

(IN-KD)

PARTS MODEL BARU SONIC 150R (FS150RK-2IN,3IN DAN IN)

Parts catalog news tipe SONIC 150R (FS150RK-2IN,3IN dan IN) ini secara ekslusif masing-masing berdasarkan pada tipe SONIC 150R (FS150RJ-2IN, 3IN dan IN) yang terdaftar pada Parts Catalog SONIC 150R.

Part-part yang tidak terdaftar dalam Parts Catalog news ini adalah sama seperti tipe SONIC 150R (CB150RJ-2IN, 3IN, dan IN).

Nama	Kode area	Tipe	Model	No. Seri Mesin yang berlaku	No. Seri Rangka yang berlaku	No. identifikasi throttle body yang berlaku
SONIC 150R	2IN	Repsol	FS150RK	MH1KB1113JK172401	KB11E1173201	GQ1LA B
	3IN	Standard		MH1KB1117JK173501	KB11E1173301	
	IN			MH1KB111XJK173301	KB11E1173101	

Tabel warna

- Sewaktu memesan part berwarna, bacalah tabel di bawah dan pakailah nomor part yang terdiri dari nomor part dasar yang bersangkutan kepada mana telah ditambahkan kode warna part.

SONIC 150R (FS150RK)……2IN

No.	MODEL		FS150RK				
	WARNA		Valiant red	Model yang berlaku		No. blok yang berlaku	No. Ref.
	KODE		R-383	Model pertama yang berlaku	Model akhir yang berlaku		
	Nama parts berwarna	No. dasar part	R-383				
1	BRIDGE, FORK TOP	53230-K56-N00	ZA			F-7	10
2	COVER SET, COMBINATION LIGHT LOWER	64750-K56-N00	ZA			F-23-10	4
3	COVER, L. BODY	83620-K56-N00	RSW			F-23-10	7
4	COVER, L. SIDE UPPER	64440-K56-N00	VRD			F-24	8
5	COVER, R. BODY	83610-K56-N00	RSW			F-23-10	6
6	COVER, R. SIDE UPPER	64340-K56-N00	VRD			F-24	3
7	COVER SET, L. BODY	83650-K56-NG0	ZA			F-23-10	7
8	COVER SET, L. SIDE UPPER	64410-K56-NG0	ZA			F-24	8
9	COVER SET, R. BODY	83600-K56-NG0	ZA			F-23-10	6
10	COVER SET, R. SIDE UPPER	64310-K56-NG0	ZA			F-24	3
11	COWL, L. FR. SIDE	61303-K56-N00	VRD			F-43	10
12	COWL, L. SIDE LOWER	64420-K56-N00	VRD			F-24	7
13	COWL, R. FR. SIDE	61302-K56-N00	VRD			F-43	5
14	COWL, R. SIDE LOWER	64320-K56-N00	VRD			F-24	2
15	COWL SET, FR. CENTER	61300-K56-N00	ZA			F-43	1
16	COWL SET, L. FR. SIDE	61355-K56-NG0	ZA			F-43	10
17	COWL SET, L. SIDE LOWER	64405-K56-NG0	ZA			F-24	7
18	COWL SET, R. FR. SIDE	61305-K56-NG0	ZA			F-43	5
19	COWL SET, R. SIDE LOWER	64305-K56-NG0	ZA			F-24	2
20	COWL, FR. UNDER	61304-K56-N00	ZD			F-43	4

SONIC 150R (FS150RK)……2IN

No.	MODEL		FS150RK				
	WARNA		Valiant red	Model yang berlaku		No. blok yang berlaku	No. Ref.
	KODE		R-383	Model pertama yang berlaku	Model akhir yang berlaku		
	Nama parts berwarna	No. dasar part	R-383				
21	FENDER A, FR.	61100-K56-N00	ZB			F-10	7
22	GRIP, RR.	50400-K56-N00	ZA			F-23	2
23	MARK, HONDA (55MM)	86101-K56-N00	ZA			F-50-1	1
24	STRIPE, L. BODY COVER	86832-K56-NG0	ZA			F-50-1	24
25	STRIPE, L. FR. SIDE COWL	86612-K56-NG0	ZA			F-50-1	18
26	STRIPE, L. SIDE LOWER COWL	86642-K56-NG0	ZA			F-50-1	20
27	STRIPE, L. SIDE UPPER COVER	86644-K56-NG0	ZA			F-50-1	22
28	STRIPE, R. BODY COVER	86831-K56-NG0	ZA			F-50-1	23
29	STRIPE, R. FR. SIDE COWL	86611-K56-NG0	ZA			F-50-1	17
30	STRIPE, R. SIDE LOWER COWL	86641-K56-NG0	ZA			F-50-1	19
31	STRIPE, R. SIDE UPPER COVER	86643-K56-NG0	ZA			F-50-1	21
32	SWINGARM SUB ASSY., RR	52200-K56-N00	ZA			F-32	8
33	WHEEL SUB ASSY., FR.	44650-K56-N00	ZC			F-14-40	6
34	WHEEL SUB ASSY., RR.	42650-K56-N00	ZC			F-19-40	9
35	WHEEL, FR.	44601-K56-N02	WRD			F-14-40	6
36	WHEEL COMP., RR.	42601-K56-N02	WRD			F-19-40	9

SONIC 150R (FS150RK)……3IN

No.	MODEL		FS150RK				
	WARNA		Mat gunpowder black metallic	Model yang berlaku		No. blok yang berlaku	No. Ref.
	KODE		NH-436M	Model pertama yang berlaku	Model akhir yang berlaku		
	Nama parts berwarna	No. dasar part	NH-436				
1	BRIDGE, FORK TOP	53230-K56-N00	ZA			F-7	10
2	COVER SET, COMBINATION LIGHT LOWER	64750-K56-N00	ZA			F-23-10	4
3	COVER, L. BODY	83620-K56-N00	MGB			F-23-10	7
4	COVER, L. SIDE UPPER	64440-K56-N00	MGB			F-24	8
5	COVER, R. BODY	83610-K56-N00	MGB			F-23-10	6
6	COVER, R. SIDE UPPER	64340-K56-N00	MGB			F-24	3
7	COVER SET, L. BODY	83650-K56-NH0	ZA			F-23-10	7
8	COVER SET, L. SIDE UPPER	64410-K56-NH0	ZA			F-24	8
9	COVER SET, R. BODY	83600-K56-NH0	ZA			F-23-10	6
10	COVER SET, R. SIDE UPPER	64310-K56-NH0	ZA			F-24	3
11	COWL, L. SIDE LOWER	64420-K56-N00	MGB			F-24	7
12	COWL, R. SIDE LOWER	64320-K56-N00	MGB			F-24	2
13	COWL SET, FR. CENTER	61300-K56-N00	ZA			F-43	1
14	COWL SET, L. SIDE LOWER	64405-K56-NH0	ZA			F-24	7
15	COWL SET, R. SIDE LOWER	64305-K56-NH0	ZA			F-24	2
16	COWL, FR. UNDER	61304-K56-N00	ZJ			F-43	4
17	COWL, L. FR. SIDE	61303-K56-N00	ZF			F-43	3
18	COWL, R. FR. SIDE	61302-K56-N00	ZF			F-43	2
19	FENDER A, FR.	61100-K56-N00	ZE			F-10	7
20	GRIP, RR.	50400-K56-N00	ZA			F-23	2

SONIC 150R (FS150RK)……3IN

No.	MODEL		FS150RK				
	WARNA		Mat gunpowder black metallic	Model yang berlaku		No. blok yang berlaku	No. Ref.
	KODE		NH-436M	Model pertama yang berlaku	Model akhir yang berlaku		
	Nama parts berwarna	No. dasar part	NH-436				
21	MARK, HONDA (55MM)	86101-K56-N00	ZA			F-50-4	1
22	STRIPE A, L. SIDE UPPER COVER	86644-K56-NH0	ZA			F-50-4	9
23	STRIPE A, R. SIDE UPPER COVER	86643-K56-NH0	ZA			F-50-4	7
24	STRIPE B, L. SIDE UPPER COVER	86646-K56-NH0	ZA			F-50-4	13
25	STRIPE B, R. SIDE UPPER COVER	86645-K56-NH0	ZA			F-50-4	11
26	STRIPE, L. BODY COVER	86832-K56-NH0	ZA			F-50-4	17
27	STRIPE, L. SIDE LOWER COWL	86642-K56-NH0	ZA			F-50-4	5
28	STRIPE, R. BODY COVER	86831-K56-NH0	ZA			F-50-4	15
29	STRIPE, R. SIDE LOWER COWL	86641-K56-NH0	ZA			F-50-4	3
30	SWINGARM SUB ASSY., RR.	52200-K56-N00	ZA			F-32	8
31	WHEEL SUB ASSY., FR.	44650-K56-N00	ZC			F-14-40	6
32	WHEEL SUB ASSY., RR.	42650-K56-N00	ZC			F-19-40	9
33	WHEEL, FR.	44601-K56-N02	WRD			F-14-40	6
34	WHEEL COMP., RR.	42601-K56-N02	WRD			F-19-40	9

SONIC 150R (FS150RK)……IN

No.	MODEL		FS150RK					
	WARNA		Mat gunpowder black metallic	Valiant red	Model yang berlaku		No. blok yang berlaku	No. Ref.
	KODE		NH-436M	R-383	Model pertama yang berlaku	Model akhir yang berlaku		
	Nama parts berwarna	No. dasar part	NH-436	R-383				
1	BRIDGE, FORK TOP	53230-K56-N00	ZA	ZA			F-7	10
2	COVER SET, COMBINATION LIGHT LOWER	64750-K56-N00	ZA	ZA			F-23-10	4
3	COVER, L. BODY	83620-K56-N00	MGB	FMB			F-23-10	7
4	COVER, L. SIDE UPPER	64440-K56-N00	MGB	VRD			F-24	8
5	COVER, R. BODY	83610-K56-N00	MGB	FMB			F-23-10	6
6	COVER, R. SIDE UPPER	64340-K56-N00	MGB	VRD			F-24	3
7	COVER SET, L. BODY	83650-K56-NF0	ZB	ZA			F-23-10	7
8	COVER SET, L. SIDE UPPER	64410-K56-NF0	ZB	ZA			F-24	8
9	COVER SET, R. BODY	83600-K56-NF0	ZB	ZA			F-23-10	6
10	COVER SET, R. SIDE UPPER	64310-K56-NF0	ZB	ZA			F-24	3
11	COWL, L. SIDE LOWER	64420-K56-N00	MGB	RSW			F-24	7
12	COWL, R. SIDE LOWER	64320-K56-N00	MGB	RSW			F-24	2
13	COWL SET, FR. CENTER	61300-K56-N00	ZA	ZA			F-43	1
14	COWL SET, L. SIDE LOWER	64405-K56-NF0	ZB	ZA			F-24	7
15	COWL SET, R. SIDE LOWER	64305-K56-NF0	ZB	ZA			F-24	2
16	COWL, FR. UNDER	61304-K56-N00	ZF	ZJ			F-43	4
17	COWL, L. FR. SIDE	61303-K56-N00	ZF	ZE			F-43	3
18	COWL, R. FR. SIDE	61302-K56-N00	ZF	ZE			F-43	2
19	FENDER A, FR.	61100-K56-N00	ZE	ZF			F-10	7
20	GRIP, RR.	50400-K56-N00	ZA	ZA			F-23	2

SONIC 150R (FS150RK)……IN

No.	MODEL		FS150RK					
	WARNA		Mat gunpowder black metallic	Valiant red	Model yang berlaku		No. blok yang berlaku	No. Ref.
	KODE		NH-436M	R-383	Model pertama yang berlaku	Model akhir yang berlaku		
	Nama parts berwarna	No. dasar part	NH-436	R-383				
21	MARK, HONDA (55MM)	86101-K56-N00	ZA	ZA			F-50-4	1
22	STRIPE A, L. SIDE UPPER COVER	86644-K56-NF0	ZB	ZA			F-50-4	8
23	STRIPE A, R. SIDE UPPER COVER	86643-K56-NF0	ZB	ZA			F-50-4	6
24	STRIPE B, L. SIDE UPPER COVER	86646-K56-NF0	ZB	ZA			F-50-4	12
25	STRIPE B, R. SIDE UPPER COVER	86645-K56-NF0	ZB	ZA			F-50-4	10
26	STRIPE, L. BODY COVER	86832-K56-NF0	ZB	ZA			F-50-4	16
27	STRIPE, L. SIDE LOWER COWL	86642-K56-NF0	ZB	ZA			F-50-4	4
28	STRIPE, R. BODY COVER	86831-K56-NF0	ZB	ZA			F-50-4	14
29	STRIPE, R. SIDE LOWER COWL	86641-K56-NF0	ZB	ZA			F-50-4	2
30	SWINGARM SUB ASSY., RR.	52200-K56-N00	ZA	ZA			F-32	8
31	WHEEL SUB ASSY., FR.	44650-K56-N00	ZB	ZB			F-14-40	6
32	WHEEL SUB ASSY., RR.	42650-K56-N00	ZB	ZB			F-19-40	9
33	WHEEL, FR.	44601-K56-N02	MAG	MAG			F-14-40	6
34	WHEEL COMP., RR.	42601-K56-N02	MAG	MAG			F-19-40	9

PARTS CATALOG NEWS

No. Blok	No. Ref	No. Part	Deskripsi	Jumlah SONIC 150R (FS150Rx) G H J K	No. Part asal	Parts Catalog
E-8	3	22121-K56-N02	CENTER, CLUTCH.....	- - - 1	22121-K56-N01	2IN,3IN,IN
	6	22350-K56-N02	PLATE, CLUTCH PRESSURE.....	- - - 1	22350-K56-N01	2IN,3IN,IN
E-23	7	16400-K56-N02	THROTTLE BODY ASSY.(GQ1LA B)....	- - - 1	16400-K56-N01	2IN,3IN,IN
	9	16430-K97-T01	VALVE SET, IDLE AIR CONTROL.....	- - - 1	16430-K56-N01	2IN,3IN,IN
F-10	7	61100-K56-N00ZE	FENDER A, FR.			
			NH436M			
			MAT GUNPOWDER BLACK METALLIC	- - - 1		IN
		61100-K56-N00ZF	FENDER A, FR.			
			R383 ..... VALIANT RED	- - - 1		IN
F-14-40	1	44601-K56-N02WRD	WHEEL, FR.....	- - - 1		2IN,3IN
		44601-K56-N02MAG	WHEEL, FR.....	- - - 1		IN
	2	42601-K56-N02WRD	WHEEL COMP., RR.....	- - - 1		2IN,3IN
		42601-K56-N02MAG	WHEEL COMP., RR.....	- - - 1		IN
F-23-10	6	83600-K56-NF0ZA	COVER SET, R. BODY(WITH STRIPE)		83600-K56-NA0ZA	
			R383 ..... VALIANT RED	- - - 1		IN
		83600-K56-NF0ZB	COVER SET, R. BODY(WITH STRIPE)		83600-K56-NA0ZB	
			NH436M			
			MAT GUNPOWDER BLACK METALLIC	- - - 1		IN
		83600-K56-NG0ZA	COVER SET, R. BODY(WITH STRIPE)		83600-K56-NB0ZA	
			NH196 ..... ROSS WHITE	- - - 1		2IN
		83600-K56-NH0ZA	COVER SET, R. BODY(WITH STRIPE)		83600-K56-NC0ZA	
			NH436M.			
			MAT GUNPOWDER BLACK METALLIC	- - - 1		3IN
	7	83650-K56-NF0ZA	COVER SET, L. BODY(WITH STRIPE)		83650-K56-NA0ZA	
			R383 ..... VALIANT RED	- - - 1		IN
		83650-K56-NF0ZB	COVER SET, L. BODY(WITH STRIPE)		83650-K56-NA0ZB	
			NH436M			
			MAT GUNPOWDER BLACK METALLIC	- - - 1		IN
		83650-K56-NG0ZA	COVER SET, L. BODY(WITH STRIPE)		83650-K56-NB0ZA	
			NH196 ..... ROSS WHITE	- - - 1		2IN
		83650-K56-NH0ZA	COVER SET, L. BODY(WITH STRIPE)		83650-K56-NC0ZA	
			NH436M			
			MAT GUNPOWDER BLACK METALLIC	- - - 1		3IN

No. Blok	No. Ref	No. Part	Deskripsi	Jumlah SONIC 150R (FS150R-) G H J K	No. Part asal	Parts Catalog
	8	83620-K56-N00RSW	COVER, L. BODY(NO STRIPE)			
			R383 ..... VALIANT RED	- - - 1		2IN
		83620-K56-N00MGB	COVER, L. BODY(NO STRIPE)			
			NH436M			
			MAT GUNPOWDER BLACK METALLIC	- - - 1		3IN,IN
		83620-K56-N00FMB	COVER, L. BODY(NO STRIPE)			
			R383 ..... VALIANT RED	- - - 1		IN
	9	83610-K56-N00RSW	COVER, R. BODY(NO STRIPE)			
			R383 ..... VALIANT RED	- - - 1		2IN
		83610-K56-N00MGB	COVER, R. BODY(NO STRIPE)			
			NH436M			
			MAT GUNPOWDER BLACK METALLIC	- - - 1		3IN,IN
		83610-K56-N00FMB	COVER, R. BODY(NO STRIPE)			
			R383 ..... VALIANT RED	- - - 1		IN
F-24	2	64305-K56-NF0ZA	COWL SET, R. SIDE LOWER(WITH STRIPE)		64305-K56-NA0ZA	
			R383 ..... VALIANT RED	- - - 1		IN
		64305-K56-NF0ZB	COWL SET, R. SIDE LOWER(WITH STRIPE)		64305-K56-NA0ZB	
			NH436M			
			MAT GUNPOWDER BLACK METALLIC	- - - 1		IN
		64305-K56-NG0ZA	COWL SET, R. SIDE LOWER(WITH STRIPE)			
			R383 ..... VALIANT RED	- - - 1		2IN
		64305-K56-NH0ZA	COWL SET, R. SIDE LOWER(WITH STRIPE)		64305-K56-NC0ZA	
			NH436M			
			MAT GUNPOWDER BLACK METALLIC	- - - 1		3IN
	3	64310-K56-NF0ZA	COVER SET, R. SIDE UPPER(WITH STRIPE)		64310-K56-NA0ZA	
			R383 ..... VALIANT RED	- - - 1		IN
		64310-K56-NF0ZB	COVER SET, R. SIDE UPPER(WITH STRIPE)		64310-K56-NA0ZB	
			NH436M			
			MAT GUNPOWDER BLACK METALLIC	- - - 1		IN
		64310-K56-NG0ZA	COVER SET, R. SIDE UPPER(WITH STRIPE)			
			R383 ..... VALIANT RED	- - - 1		2IN
		64310-K56-NH0ZA	COVER SET, R. SIDE UPPER(WITH STRIPE)		64310-K56-NC0ZA	
			NH436M			
			MAT GUNPOWDER BLACK METALLIC	- - - 1		3IN
	7	64405-K56-NF0ZA	COWL SET, L. SIDE LOWER(WITH STRIPE)		64405-K56-NA0ZA	
			R383 ..... VALIANT RED	- - - 1		IN

No. Blok	No. Ref	No. Part	Deskripsi	Jumlah SONIC 150R (FS150Rx) G H J K	No. Part asal	Parts Catalog
		64405-K56-NF0ZB	COWL SET, L. SIDE LOWER(WITH STRIPE)		64405-K56-NA0ZB	
			NH436M			
			MAT GUNPOWDER BLACK METALLIC	- - - 1		IN
		64405-K56-NG0ZA	COWL SET, L. SIDE LOWER(WITH STRIPE)			
			R383 ..... VALIANT RED	- - - 1		2IN
		64405-K56-NH0ZA	COWL SET, L. SIDE LOWER(WITH STRIPE)		64405-K56-NC0ZA	
			NH436M			
			MAT GUNPOWDER BLACK METALLIC	- - - 1		3IN
	8	64410-K56-NF0ZA	COVER SET, L. SIDE UPPER(WITH STRIPE)		64410-K56-NA0ZA	
			R383 ..... VALIANT RED	- - - 1		IN
		64410-K56-NF0ZB	COVER SET, L. SIDE UPPER(WITH STRIPE)		64410-K56-NA0ZB	
			NH436M.			
			MAT GUNPOWDER BLACK METALLIC	- - - 1		IN
		64410-K56-NG0ZA	COVER SET, L. SIDE UPPER(WITH STRIPE)			
			R383 ..... VALIANT RED	- - - 1		2IN
		64410-K56-NH0ZA	COVER SET, L. SIDE UPPER(WITH STRIPE)		64410-K56-NC0ZA	
			NH436M			
			MAT GUNPOWDER BLACK METALLIC	- - - 1		3IN
		64440-K56-N00VRD	COVER, L. SIDE UPPER(NO STRIPE)			
			R383 ..... VALIANT RED	- - - 1		2IN,IN
		64440-K56-N00MGB	COVER, L. BODY(NO STRIPE)			
			NH436M			
			MAT GUNPOWDER BLACK METALLIC	- - - 1		3IN,IN
	9	64340-K56-N00VRD	COVER, R. SIDE UPPER(NO STRIPE)			
			R383 ..... VALIANT RED	- - - 1		2IN,IN
		64340-K56-N00MGB	COVER, R. SIDE UPPER(NO STRIPE)			
			NH436M			
			MAT GUNPOWDER BLACK METALLIC	- - - 1		3IN,IN
	10	64420-K56-N00VRD	COWL, L. SIDE LOWER(NO STRIPE)			
			R383 ..... VALIANT RED	- - - 1		2IN
		64420-K56-N00MGB	COWL, L. SIDE LOWER(NO STRIPE)			
			NH436M			
			MAT GUNPOWDER BLACK METALLIC	- - - 1		3IN,IN
		64420-K56-N00RSW	COWL, L. SIDE LOWER(NO STRIPE)			
			R383 ..... VALIANT RED	- - - 1		IN
	11	64320-K56-N00VRD	COWL, R. SIDE LOWER(NO STRIPE)			
			R383 ..... VALIANT RED	- - - 1		2N

No. Blok	No. Ref	No. Part	Deskripsi	Jumlah SONIC 150R (FS150R-) G H J K	No. Part asal	Parts Catalog
		64320-K56-N00MGB	COWL, L. SIDE LOWER(NO STRIPE)			
			NH436M			
			MAT GUNPOWDER BLACK METALLIC	- - - 1		3IN,IN
		64320-K56-N00RSW	COWL, L. SIDE LOWER(NO STRIPE)			
			R383 ..... VALIANT RED	- - - 1		IN
F-43	2	61302-K56-N00ZF	COWL, R. FR. SIDE (NO STRIPE)			
			NH436M			
			MAT GUNPOWDER BLACK METALLIC	- - - 1		IN
		61302-K56-N00VRD	COWL, R. FR. SIDE(NO STRIPE)			
			R383 ..... VALIANT RED	- - - 1		2IN
	3	61303-K56-N00ZF	COWL, L. FR. SIDE(NO STRIPE)			
			NH436M			
			MAT GUNPOWDER BLACK METALLIC	- - - 1		IN
		61303-K56-N00VRD	COWL, L. FR. SIDE(NO STRIPE)			
			R383 ..... VALIANT RED	- - - 1		2IN
	4	61304-K56-N00ZF	COWL, FR. UNDER(NO STRIPE)			
			NH436M			
			MAT GUNPOWDER BLACK METALLIC	- - - 1		IN
		61304-K56-N00ZJ	COWL, FR. UNDER(NO STRIPE)			
			R383 ..... VALIANT RED	- - - 1		3IN,IN
	5	61305-K56-NG0ZA	COWL SET, R. FR. SIDE(WITH STRIPE)			
			R383 ..... VALIANT RED	- - - 1		2IN
	10	61355-K56-NG0ZA	COWL SET, L. FR. SIDE (WITH STRIPE)			
			R383 ..... VALIANT RED	- - - 1		2IN
F-50-1	17	86611-K56-NG0ZA	STRIPE, R. FR. SIDE COWL.....		86611-K56-NB0ZA	
			R383 ..... VALIANT RED	- - - 1		2IN
	18	86612-K56-NG0ZA	STRIPE, L. FR. SIDE COWL.....		86612-K56-NB0ZA	
			R383 ..... VALIANT RED	- - - 1		2IN
	19	86641-K56-NG0ZA	STRIPE, R. SIDE LOWER COWL.....		86641-K56-NB0ZA	
			R383 ..... VALIANT RED	- - - 1		2IN
	20	86642-K56-NG0ZA	STRIPE, L. SIDE LOWER COWL.....		86642-K56-NB0ZA	
			R383 ..... VALIANT RED	- - - 1		2IN
	21	86643-K56-NG0ZA	STRIPE, R. SIDE UPPER COVER.....		86643-K56-NB0ZA	
			R383 ..... VALIANT RED	- - - 1		2IN

No. Blok	No. Ref	No. Part	Deskripsi	Jumlah SONIC 150R (FS150RK) G H J K	No. Part asal	Parts Catalog
	22	86644-K56-NGOZA	STRIPE, L. SIDE UPPER COVER		86644-K56-NBOZA	
			R383 ..... VALIANT RED	- - - 1		2IN
	23	86831-K56-NGOZA	STRIPE, R. BODY COVER		86831-K56-NBOZA	
			R383 ..... VALIANT RED	- - - 1		2IN
	24	86832-K56-NGOZA	STRIPE, L. BODY COVER		86832-K56-NBOZA	
			R383 ..... VALIANT RED	- - - 1		2IN

F-50-4 MARK/STRIPE(FS150RK-3IN,IN)

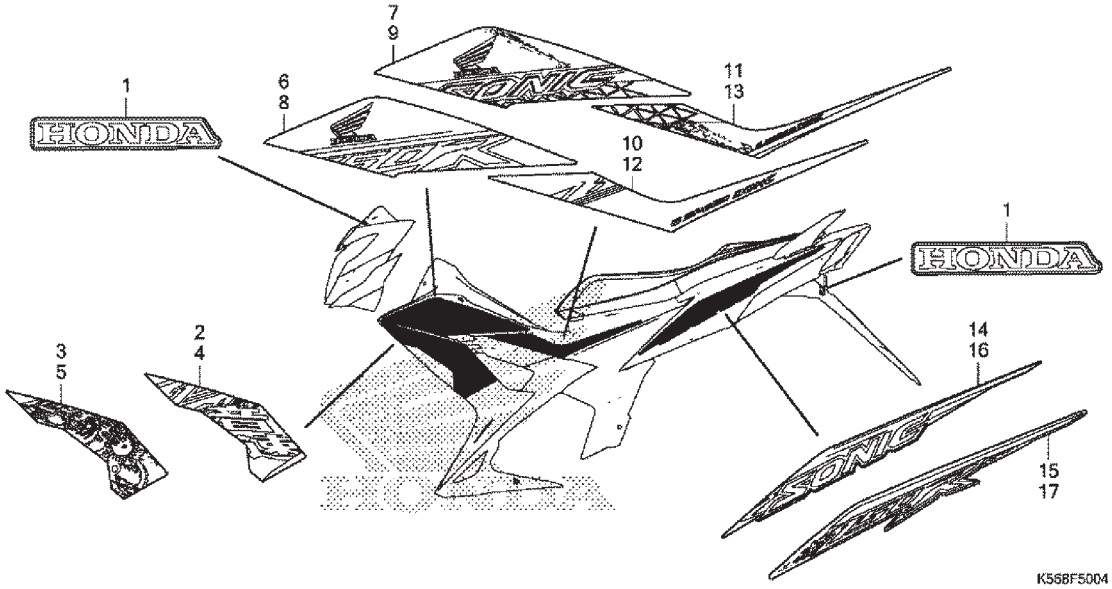

No. Blok	No. Ref	No. Part	Deskripsi	Jumlah SONIC 150R (FS150R-) G H J K	No. Part asal	Parts Catalog
F-50-4	1	86101-K56-N00ZA	MARK, HONDA(55MM).....	- - - 2		3IN,IN
	2	86641-K56-NF0ZA	STRIPE, R. SIDE LOWER COWL			
			R383 ..... VALIANT RED	- - - 1		IN
		86641-K56-NF0ZB	STRIPE, R. SIDE LOWER COWL			
			NH436M			
			MAT GUNPOWDER BLACK METALLIC	- - - 1		IN
	3	86641-K56-NH0ZA	STRIPE, R. SIDE LOWER COWL			
			NH436M			
			MAT GUNPOWDER BLACK METALLIC	- - - 1		3IN
	4	86642-K56-NF0ZA	STRIPE, L. SIDE LOWER COWL			
			R383 ..... VALIANT RED	- - - 1		IN
		86642-K56-NF0ZB	STRIPE, L. SIDE LOWER COWL			
			NH436M			
			MAT GUNPOWDER BLACK METALLIC	- - - 1		IN
	5	86642-K56-NH0ZA	STRIPE, L. SIDE LOWER COWL			
			NH436M			
			MAT GUNPOWDER BLACK METALLIC	- - - 1		3IN
	6	86643-K56-NF0ZA	STRIPE A, R. SIDE UPPER COVER			
			R383 ..... VALIANT RED	- - - 1		IN
		86643-K56-NF0ZB	STRIPE A, R. SIDE UPPER COVER			
			NH436M			
			MAT GUNPOWDER BLACK METALLIC	- - - 1		IN
	7	86643-K56-NH0ZA	STRIPE A, R. SIDE UPPER COVER			
			NH436M			
			MAT GUNPOWDER BLACK METALLIC	- - - 1		3IN
	8	86644-K56-NF0ZA	STRIPE A, L. SIDE UPPER COVER			
			R383 ..... VALIANT RED	- - - 1		IN
		86644-K56-NF0ZB	STRIPE A, L. SIDE UPPER COVER			
			NH436M			
			MAT GUNPOWDER BLACK METALLIC	- - - 1		IN
	9	86644-K56-NH0ZA	STRIPE A, L. SIDE UPPER COVER			
			NH436M			
			MAT GUNPOWDER BLACK METALLIC	- - - 1		3IN
	10	86645-K56-NF0ZA	STRIPE B, R. SIDE UPPER COVER			
			R383 ..... VALIANT RED	- - - 1		IN
		86645-K56-NF0ZB	STRIPE B, R. SIDE UPPER COVER			
			NH436M			
			MAT GUNPOWDER BLACK METALLIC	- - - 1		IN

No. Blok	No. Ref	No. Part	Deskripsi	Jumlah SONIC 150R (FS150RK) G H J K	No. Part asal	Parts Catalog
	11	86645-K56-NH0ZA	STRIPE B, R. SIDE UPPER COVER			
			NH436M			
			MAT GUNPOWDER BLACK METALLIC	- - - 1		3IN
	12	86646-K56-NF0ZA	STRIPE B, L. SIDE UPPER COVER			
			R383 ..... VALIANT RED	- - - 1		IN
		86646-K56-NF0ZB	STRIPE B, L. SIDE UPPER COVER			
			NH436M			
			MAT GUNPOWDER BLACK METALLIC	- - - 1		IN
	13	86646-K56-NH0ZA	STRIPE B, L. SIDE UPPER COVER			
			NH436M			
			MAT GUNPOWDER BLACK METALLIC	- - - 1		3IN
	14	86831-K56-NF0ZA	STRIPE, R. BODY COVER			
			R383 ..... VALIANT RED	- - - 1		IN
		86831-K56-NF0ZB	STRIPE, R. BODY COVER			
			NH436M			
			MAT GUNPOWDER BLACK METALLIC	- - - 1		IN
	15	86831-K56-NH0ZA	STRIPE, R. BODY COVER			
			NH436M			
			MAT GUNPOWDER BLACK METALLIC	- - - 1		3IN
	16	86832-K56-NF0ZA	STRIPE, L. BODY COVER			
			R383 ..... VALIANT RED	- - - 1		IN
		86832-K56-NF0ZB	STRIPE, L. BODY COVER			
			NH436M			
			MAT GUNPOWDER BLACK METALLIC	- - - 1		IN
	17	86832-K56-NH0ZA	STRIPE, L. BODY COVER			
			NH436M			
			MAT GUNPOWDER BLACK METALLIC	- - - 1		3IN

PT Astra Honda Motor
TECHNICAL SERVICE DIVISION

Dipublikasikan oleh:
Honda Motor Co., Ltd.

Dicetak di Indonesia
ID.XXX.XXXX.XXXX.XX.18